Haines Lutak Dock

Design & Development Concepts Report

March 2017

prepared by: R&M

List of Preparers:

Prepared by R&M Consultants, Inc. for Haines Borough

Haines Borough:

Brad Ryan - Interim Borough Manager

Shawn Bell – Acting Public Facilities Manager

Krista Kielsmeier – Executive Assistant to the Manager

R&M Consultants, Inc.:

John Daley, PE – Project Manager

Van Le, AICP – Planning and Community Outreach

Jean Cumlat, EIT – Engineering Support

Taryn Oleson – Planning and Community Outreach Support

Bob Pintner, PE - Senior Geotechnical Engineer

EXECUTIVE SUMMARY

In October 2016 the Haines Borough authorized R&M Consultants, Inc. (R&M) to proceed with the Lutak Dock Design and Development Concepts project. The purpose of the project was to outline alternatives, options, and costs to replace the Borough's portion of Lutak Dock, which has reached the end of its service life. The project also included a series of community meetings.

R&M solicited input from Borough staff, industry stakeholders, and the community at the first public meeting in November 2016. Three dock replacement alternatives were then advanced. Two of the alternatives included step-down options of each original concept. The alternatives brought forward for development include:

- Alternative 1A — Encapsulate existing cells with a modified diaphragm and reclaim uplands at cells 5, 6, and 7. Estimated cost is $37,420,000.
- Alternative 1B — Encapsulate existing cells with a modified diaphragm with no reclaimed uplands. Estimated cost is $31,989,000.
- Alternative 2 — Remove existing dock and provide a pipe pile supported platform dock. Estimated cost is $61,840,000.
- Alternative 3A — Remove existing dock and provide a series of dolphins across the entire facility and provide a transfer bridge. Estimated cost is $25,383,000.
- Alternative 3B — Remove existing dock and provide minimal dolphins and a transfer bridge. Estimated cost is $21,166,000.

The engineering recommended alternative is 1B with an estimated cost of $31,989,000. This alternative maintains the same general footprint and use as the existing dock. It supports existing users including general cargo and fuel transfer. It remains a general purpose dock with some capacity for other and future users. The total usable upland area is approximately 3.9 acres.

A summary of meetings since project began in October 2016 include:

- Industry Stakeholder Coordination Meeting - November 1, 2016 – Solicit Input.
- Community Meeting #1 – November 1, 2016 – Solicit Input.
- Community Meeting #2 – December 15, 2016 – Present Preliminary Findings.
- Business Community Meeting – Chamber of Commerce Luncheon – December 16, 2016– Present Preliminary Findings.
- Community Meeting #3 – Joint Work Session with Ports and Harbors Advisory Committee and Planning Commission. – Present Findings and Engineering Recommendation.

A website for the project was developed and all pertinent project documents have been posted:

http://www.lutakdock.com/

TABLE OF CONTENTS

Executive Summary ii

List of Figures iv

List of Appendices iv

List of Acronyms and abbreviations v

1.0 Introduction 1

2.0 Project Goals and Objectives 1

3.0 Project Timeline 1

4.0 Existing Dock 2

5.0 Previous Community Planning and Support 5

6.0 Mine Exporting at Lutak Dock 6

7.0 Consequence of no Action 7

8.0 Design Concept Options/Alternatives for Lutak Dock: 8

- 8.1 Alternative 1A: Encapsulated Cells with Modified Diaphragm and Reclaimed Uplands 9
- 8.2 Alternative 1B: Encapsulated Cells with Modified Diaphragm 10
- 8.3 Alternative 2: Platform Dock 11
- 8.3 Alternative 3A: Berthing Dolphins and Transfer Bridge 12
- 8.4 Alternative 3B: Minimal Berthing Dolphins and Transfer Bridge 13

9.0 Community Input Summary 13

10.0 Recommendations 13

11.0 Risk and Uncertanty 14

12.0 Next Steps – Review and Approval Process 15

LIST OF FIGURES

Figure 1 – Existing Dock Location 1
Figure 2 –Existing Dock Section 2
Figure 3 – Cargo Barge (Lyndon Alaska Marine Lines) 3
Figure 4 – Tank Farm and Fuel Manifold 4
Figure 5 – Sink Hole with Loss of Fill 5
Figure 6 – Former US Army POL Site 7
Figure 7 - Alternative 1A 9
Figure 8 – Alternative 1B 10
Figure 9 – Alternative 2 11
Figure 10 – Alternative 3 12

LIST OF APPENDICES

APPENDIX A:
Lutak Dock Design and Development Concepts Progress Drawings 12/23/16

APPENDIX B:
Benefit-Cost Analysis of the Lutak Dock Replacement December 2016

APPENDIX C:
Alternatives Analysis Summary Matrix

APPENDIX D:
Community Input Summaries

APPENDIX E:
Mine Export Memo

LIST OF ACRONYMS AND ABBREVIATIONS

AMHS	Alaska Marine Highway System
AML	Alaska Marine Lines
CSB	concentrate storage building
DOT&PF	Department of Transportation and Public Facilities
R&M	R&M Consultants, Inc.
USACE	United States Army Corps of Engineers

1.0 INTRODUCTION

The Lutak Dock is in need of repair or replacement as it is nearing the end of its useful life. The Haines Borough hired R&M Consultants, Inc. (R&M) to provide professional engineering, geotechnical review, planning and public involvement services to outline feasible alternatives for the replacement of the dock, communicate project objectives and milestones with the Haines community and elected officials in determining the best alternative for the Lutak Dock Design and Development Concepts Project. This report is intended to provide a summary of the planning, public involvement, and engineering background for the project.

FIGURE 1 – EXISTING DOCK LOCATION

2.0 PROJECT GOALS AND OBJECTIVES

The goals and objectives of this project include:

- Provide at least 3 conceptual designs for replacing the dock.
- Provide preliminary designs as required to determine feasibility and to identify the size and quantities of major elements.
- Provide cost estimates for the concept alternatives.
- Facilitate 3 public meetings and incorporate feedback into the process.

3.0 PROJECT TIMELINE

The project started in October 2016 with this report being the final design concept report.

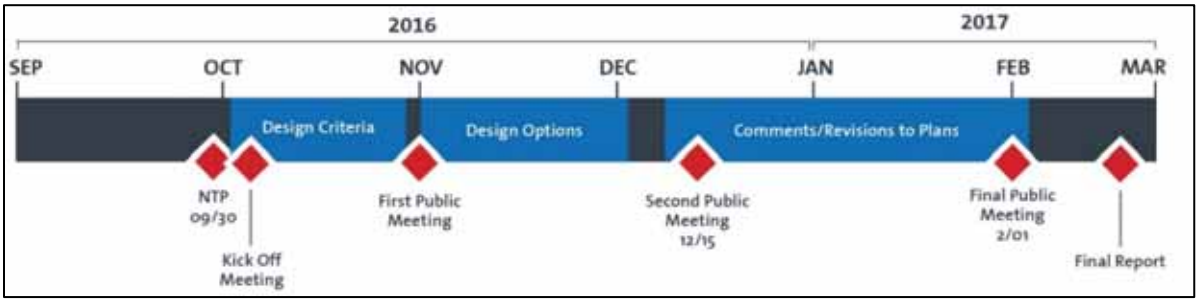

4.0 EXISTING DOCK

Lutak Dock is located in Lutak Inlet near the northern end of Chilkoot Inlet, which is in turn near the northern end of Lynn Canal. The original Lutak Dock was constructed in 1953 by the United States Army Corps of Engineers (USACE). It consists of 15 full circle sheet pile cells connected by interconnecting sheet pile arcs. An L-shaped concrete cap, about 9' high sits on top of the front face of the cells. The depth along the dock is generally about –35'.

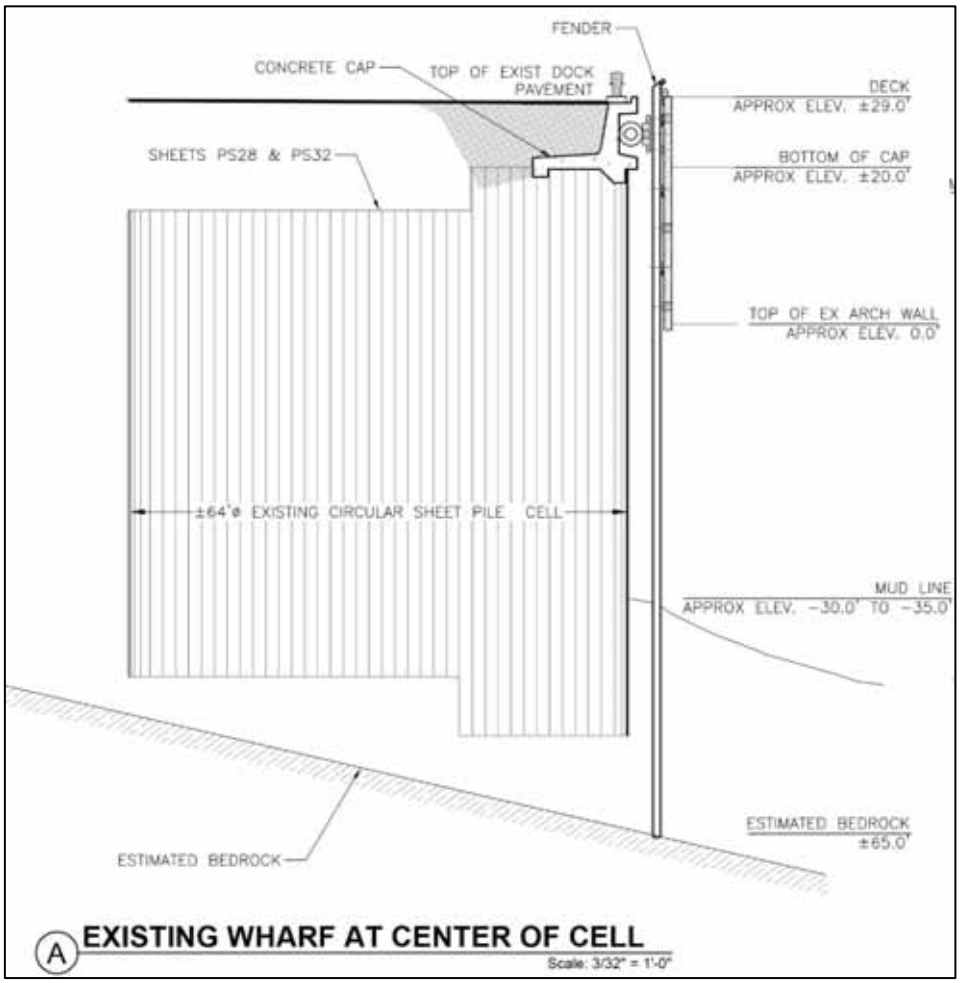

FIGURE 2 –EXISTING DOCK SECTION

The Department of Transportation and Public Facilities (DOT&PF) Alaska Marine Highway System (AMHS) previously owned four of the cells (Cell 1-4) on the east end of this dock, which is used for the Ferry Terminal. These cells along with cell 5 and portions of cells 6 and 7 were recently removed in a ferry berth renovation project. The City and Borough of Haines owns the remaining cells 8 through 15 and the loading ramp to the west. The Borough's dock face is about 550 feet long and is currently used by Alaska Marine Lines (AML) and Delta Western for freight and fuel loading/unloading operations.

FIGURE 3 – CARGO BARGE (LYNDEN ALASKA MARINE LINES)

Lutak Dock is Haines' primary marine industrial facility; it is an ice-free dock that accommodates regularly scheduled shipments of fuel and freight for the Borough and surrounding area. The Lutak Dock is responsible for most cargo and freight movement activity in Haines and currently operates year-round. The two primary users of Lutak Dock are AML and Delta Western, which move cargo and bulk fuel respectively. In fiscal year 2016, the dock generated approximately $421,600 in dockage and wharfage revenues (Haines Borough, 2016). Recent activity includes:

- Oil Transferred - 12-13 million gallons annually.
- General Cargo Transferred - 9,845 tons in 2010.
- Hazardous Cargo Transferred - 2,368 tons in 2010.
- Loaded Containers at Lutak Dock - 4,033 in 2009.

FIGURE 4 – TANK FARM AND FUEL MANIFOLD

Inspections of the dock have revealed corrosion, including complete wall penetration of the thinner wall sections on the interconnecting arcs. In 2002 the interconnection arc sheet piles were found to have holes in them and a project was advanced to drive new sheets in the arc areas. In 2004 cell 4 at the Alaska Marine Highway section of the dock failed when sheets at the face split open spilling the fill into the bay. In 2007 a project was advanced to stabilize the pile cap in the area of cell 4. In 2010, sink holes appeared in the pavement along the length of the structure.

A 2014 inspection conducted by Echelon Engineering for PND Engineers reported thickness readings on the main sheet pile cells of significant losses in wall thickness, between 20% and 87%, with an average loss of 37% of the original 0.500-inch wall thickness. With this type of major (30 to 50% section loss at any location) and severe damage (greater than 50% section loss at any location), local failures and buckling are possible and loading restrictions may be necessary. PND Engineers' report stated "it is the opinion of PND Engineers, Inc. that the structure has reached the end of its credible 60-year service life. Further utilization is effectively on 'borrowed time'." Repairs should be carried out with high priority basis and with urgency.

FIGURE 5 – SINK HOLE WITH LOSS OF FILL

Based on the history and various reports it is unlikely that the existing dock will remain usable for another 10 years. Localized failure can be expected at any time.

5.0 PREVIOUS COMMUNITY PLANNING AND SUPPORT

A 2011 Community Opinion Survey conducted as part of the Haines Borough 2025 Comprehensive Plan showed strong support for the expansion of the Lutak industrial dock to allow for more marine commerce. Improvements and expansion of the Lutak Dock and work area will position Haines Borough to capture revenue sufficient to sustain the facility and potentially provide additional jobs and economic opportunity (Haines Borough 2025 Comprehensive Plan).

Improvements to Lutak Dock are consistent with the following Goals and Objectives of the Haines Borough 2025 Comprehensive Plan:

- Goal 3: Achieve a strong, diversified local economy that provides employment and income for all citizens that desire to work while protecting the health of the environment and quality of life. Build on local assets and competitive advantages to create economic opportunity.
- Objective 3J/4A: Capitalize on Haines' position as a transportation hub to increase transfer and shipment of cargo, supplies, fuel, and other commodities with the Yukon, northern British Columbia, and Interior Alaska.

- Goal 4: Provide a safe, reliable, and connected transportation network to move goods and people to, from, and within Haines Borough. Aggressively maintain road, port, and harbor facilities to maximize public investment, enhance public safety and access, and provide economic opportunity.
- Objective 4B: Improve harbor and marine facilities for resident use and to support commercial fishing activity.
- Objective 4C: Support Alaska Marine Highway System ferry service to and from Haines.

6.0 MINE EXPORTING AT LUTAK DOCK

As part of the Lutak Dock Design and Development Project R&M was directed to investigate the potential for including mineral export infrastructure at the Lutak Dock site. A memo was provided that outlined some of the basic components of a typical mineral export facility based on a hypothetical scenario of the development and operation of the Palmer Mine. Many of the conceptual design features were modeled after the terminal in Skagway and include a number of items resulting from lessons learned from the operation of that facility over time, particularly in regards to efficient operation and environmental regulation compliance.

For mineral export there is a requirement for a large concentrate storage building (CSB) and related support facilities. Due to environmental regulations all receiving, stockpiling, handling, and reclaiming of the mineral concentrates must be done indoors in a controlled environment. In order to accommodate the CSB and related operations, approximately 7 to 10 acres of uplands would need to be developed. This facility will not realistically fit at the current dock site, which has just over 4 acres. The concentrate storage building and related operations would fit at the nearby former US Army fuel tank farm site.

Mineral export would also require a ship loader and a berth sufficient for Handimax bulk cargo vessels. Such a berth could be provided with a series of mooring and berthing dolphins. Since this would be a single purpose berth, it would be best if it were not combined with a multi-purpose dock. It would also be best if it were located adjacent or close to the CSB. Therefore the mineral export berth would be best located at some place other than the Lutak Dock. Note that the Lutak Dock is well situated to provide general cargo support for mining operations. Cargo, equipment, supplies etc. to support mining operations could come over the Lutak Dock.

FIGURE 6 – FORMER US ARMY POL SITE

7.0 CONSEQUENCE OF NO ACTION

There have been localized failures (including the partial collapse of cell 4), sinkholes, and a number of reports outlining the poor condition of the dock. Without action it is likely that the dock will see additional and increasing localized failures. While the magnitude and timing of these types of failures is impossible to predict, it is reasonably certain that the condition will continue to deteriorate so it is only a matter of time.

Since Lutak Dock is Haines' primary marine industrial facility for the importation of freight and fuel, if it were to become nonoperational, freight and fuel would most likely be rerouted and transported via truck or a combination of barge and truck. Logistically, there are three feasible transportation route alternatives:

- Freight is trucked directly from Seattle to Haines (*approximately 1,805 road miles*).
- Freight is shipped from Seattle to Anchorage (weekly service provided by AML) and then trucked from Anchorage to Haines (*756 road miles*).
- Freight is shipped from Seattle to Valdez (weekly service provided by AML), and then trucked from Valdez to Haines (*691 road miles*).

All three freight transportation alternatives would involve a mode change from barge to truck for at least a portion of the route. Haines Borough residents and businesses could experience increased costs for goods and services based on the anticipated mode shift in freight transportation.

It is important to note that both AML and Delta Western have contingency plans for emergency operations. Should Lutak Dock have a localized failure and be taken out of operation, these service providers would likely develop a temporary emergency access plan.

8.0 DESIGN CONCEPT OPTIONS/ALTERNATIVES FOR LUTAK DOCK:

Three conceptual alternatives were developed for consideration. At the beginning of the project the original 3 concepts included:

1. Remove and replace the dock in like and kind.
2. Remove the existing dock and provide a tied-back combi-wall. (Pipe or H piles combined with sheet piling.)
3. Remove the existing dock and provide a pipe pile supported platform dock.

During the preliminary design the tied-back combi-wall was found to be technically challenged due to the relatively high height and need for multiple levels of tie backs. Therefore this alternative was not advanced.

The team contacted the ADOT&PF personnel who were involved in the recent renovations to the adjacent ferry berth. The ADOT&PF provided a large amount of valuable data including site plan drawings, air photos, cost data, and concepts. One of the concepts that were provided was the use of a modified diaphragm dock to encapsulate the existing cells. This is similar to the existing cellular dock but leaves some of the existing structure in place thereby reducing cost.

Through the community and industry stakeholder outreach process a new alternative of dolphins with a barge loading transfer bridge was added. Also the conceptual alternatives were expanded to include several step-down options of each original concept. The general alternatives brought forward for development include:

1. Encapsulate existing cells with a modified diaphragm.
2. A pipe pile supported platform dock.
3. Dolphins and a transfer bridge.

The following is a summary of the Alternatives.

8.1 ALTERNATIVE 1A: ENCAPSULATED CELLS WITH MODIFIED DIAPHRAGM AND RECLAIMED UPLANDS

This alternative involves constructing a new sheet pile cell around the existing cells. The new cells would have semicircular front and backs with straight walls connecting these. The shape of this is termed a "modified diaphragm" and has been outlined in design manuals dating back to the 1980s and prior. The straight wall sections would go in between the existing cells where the closure arcs now stand. Alternative 1A includes the reclamation of several cells (5, 6 and 7) that have been partially excavated and are owned by the Borough. The reclamation of these cells would result in approximately one-half of an acre of additional reclaimed uplands. Below are some important points regarding Alternative 1A:

- This alternative maintains the same general footprint and use as the existing dock. It supports existing users including general cargo and fuel transfer. It remains a general purpose dock.
- The total usable upland area is approximately 4.4 acres.
- Demolition is limited to the existing pile cap, closure arcs, and top section of existing fill. This saves cost.
- There are some challenges and risk associated with driving new sheets through the old closure arc area. Obstructions such as boulders would be difficult to remove in the tight space.

The estimated cost for design, permitting, and construction of Alternative 1A is $37.4 million. See Appendix A. Concepts Progress Drawings, sheet C1.2.

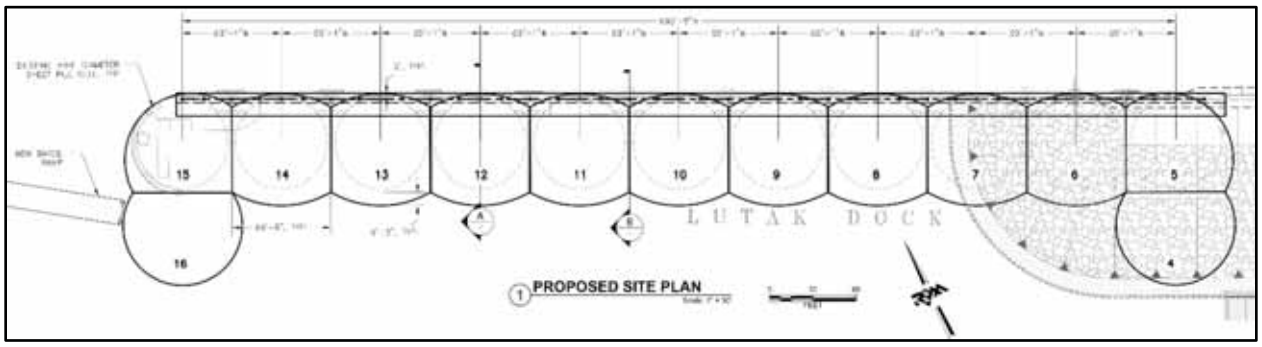

FIGURE 7 - ALTERNATIVE 1A

8.2 ALTERNATIVE 1B: ENCAPSULATED CELLS WITH MODIFIED DIAPHRAGM

Alternative 1B is almost identical to Alternative 1A, but does not include the reclamation of several cells that have been partially excavated and are owned by the Borough. Below are some important points regarding Alternative 1B:

- This alternative maintains the same general footprint and use as the existing dock. It supports existing users including general cargo and fuel transfer. It remains a general purpose dock.
- The total usable upland area is approximately 3.9 acres.
- Demolition is limited to the existing pile cap, closure arcs, and top section of existing fill. This saves cost.
- There are some challenges and risk associated with driving new sheets through the old closure arc area. Obstructions such as boulders would be difficult to remove in the tight space.

The estimated cost for design, permitting, and construction of Alternative 1B is $32 million. See Appendix A. Concepts Progress Drawings, sheet C1.3.

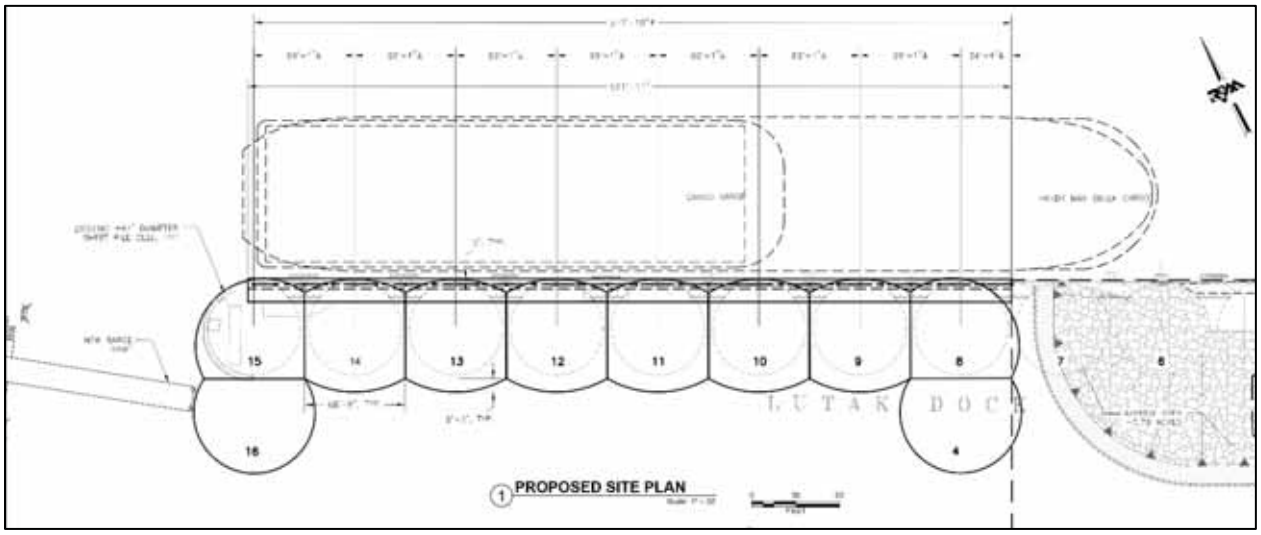

FIGURE 8 – ALTERNATIVE 1B

8.3 ALTERNATIVE 2: PLATFORM DOCK

The Platform Dock Alternative includes removing the existing dock and replacing it with all new facilities. The project would include laying the slopes back and armoring them at a 2:1 slope. The new dock would be a somewhat traditional modern pipe pile supported concrete deck dock. Below are some important points regarding Alternative 2:

- This alternative maintains the same general footprint and use as the existing dock. It supports existing users including general cargo and fuel transfer. It remains a general purpose dock.
- The total usable upland area is approximately 4.4 acres.
- This alternative provides all new facilities.
- This dock would provide a high degree of service and very good resistance to seismic loads.

The estimated cost for design, permitting and construction of Alternative 2 is $61.8 Million. See Appendix A. Concepts Progress Drawings, sheet C2.1.

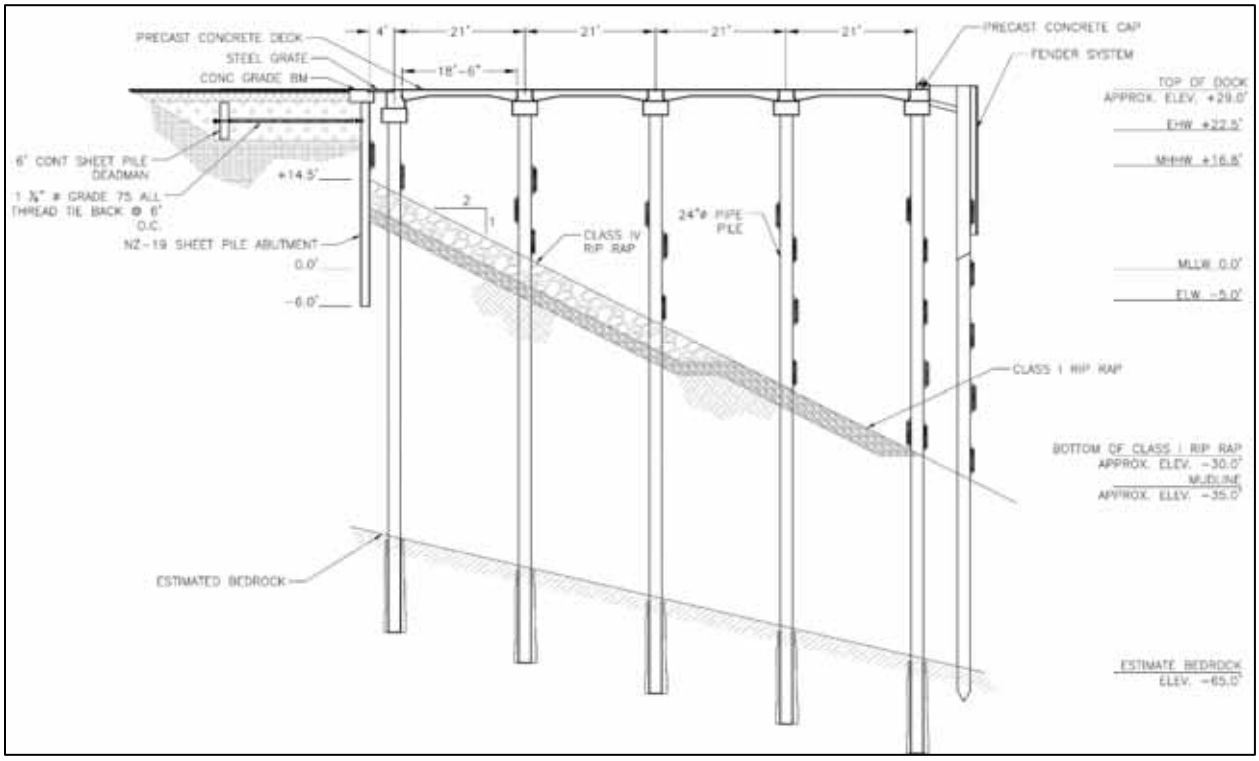

FIGURE 9 – ALTERNATIVE 2

8.3 ALTERNATIVE 3A: BERTHING DOLPHINS AND TRANSFER BRIDGE

Alternative 3A includes removing the entire existing dock and laying the slopes back and armoring them at a 2:1 slope. Berthing dolphins would then be constructed and access provided via a transfer bridge. The berthing dolphins are a stand-alone, pile-supported structure that includes a fender system. Below are some important points regarding Alternative 3A:

- The entire existing cell structure is removed.
- This alternative reduces the amount of available uplands by about 1.7 acres leaving about 2.2 acres of uplands.
- This alternative eliminates the multi-purpose capabilities of the dock.
- This alternative limits cargo barge operations to only using the transfer bridge for roll-on roll-off.

The estimated cost for design, permitting, and construction of Alternative 3A is $25.3 million. See Appendix A. Concepts Progress Drawings, sheet C3.2 and C3.4.

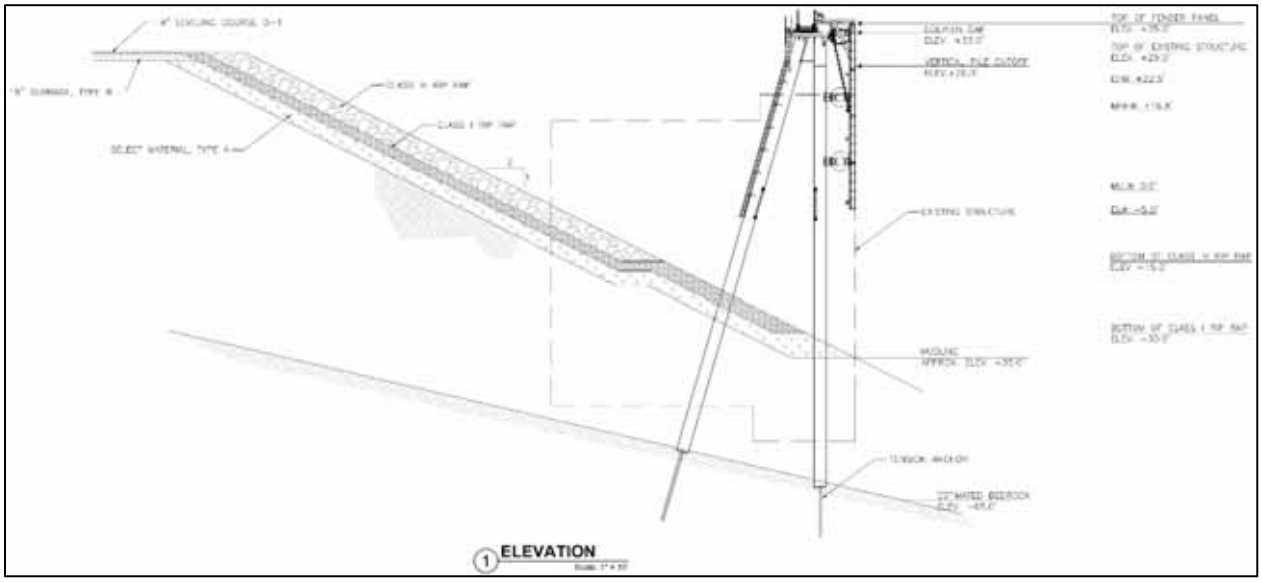

FIGURE 10 – ALTERNATIVE 3

8.4 ALTERNATIVE 3B: MINIMAL BERTHING DOLPHINS AND TRANSFER BRIDGE

Alternative 3B is identical to Alternative 3A but is modified to reduce the number of berthing dolphins. Serviceability is limited to existing fuel and cargo barges only and no future expansion to include other potential users. This is the effective minimum structure that could be used to support existing users.

The estimated cost for design, permitting, and construction of Alternative 3A is $21.1 Million. See Appendix A. Concepts Progress Drawings, sheet C3.3 and C3.4.

An Alternatives Analysis Summary Matrix has been attached as Appendix 3.

9.0 COMMUNITY INPUT SUMMARY

Integral to the Lutak Dock study has been frequent and close coordination with the Haines community, including residents, businesses and industry stakeholders, elected officials, the local Ports and Harbors committee and Planning Commission, from the very start of the project. The project team has also coordinated with mining industry, cargo and fuel barge operators to ensure technical input has been captured and reflected in the preliminary concept plans. Based on community input and feedback, the project team and Haines Borough updated the study concepts, clarified cost estimates and outlined pros and cons of the various alternatives.

All project documents including preliminary concept plan sets, community and industry meeting summaries and feedback have been posted to the project website http://www.lutakdock.com/ to further the inclusive and public transparency goals of the project. See also Appendix D: Community Input Summaries and Comments.

A summary of meetings since Project Start began in October 2016 include:

- Industry Stakeholder Coordination Meeting - November 1, 2016
  - As a result of the Stakeholder Coordination meeting, R&M included investigating the potential for mineral export infrastructure at the Lutak Dock site.
- Community Meeting #1 – November 1, 2016
  - Based on public input received, Alternative 1 was further developed to provide two modified Alternatives 1A and 1B.
- Community Meeting #2 – December 15, 2016
  - Due to public input received, Alternatives 3A and 3B were added to the study.
- Business Community Meeting – Chamber of Commerce Luncheon – December 16, 2016
- Community Meeting #3 – Joint Work Session with Ports and Harbors Advisory Committee and Planning Commission.

10.0 RECOMMENDATIONS

The following table is a decision matrix outlining the alternatives, level of service and costs for comparison. Based on public input, industry and business stakeholder input, funding availability and meeting the purpose and need of replacing the Lutak Dock, the engineering recommendation is **Alternative 1B Encapsulate using Modified Diaphragm**. This alternative provides a high level of service,

supports existing users, provides multi-use capabilities, and maintains existing upland area. It does this at a cost that is comparatively moderate.

ALTERNATIVE	SAFETY IMPROVEMENT	DESIGN YEAR LOS		COST
		Multi-Use Dock	Existing Users	
No-Action	✗	Medium	Medium	N/A
1A	✓	High	High	$$$$
1B	✓	High	High	$$$
2	✓	High	High	$$$$$$
3A	✓	Low	Medium	$$$
3B	✓	✗	Medium	$$

Legend: None ✗ Improved ✓

11.0 RISK AND UNCERTANTY

There is risk and uncertainty involved with this project including:

- Unknown or uncertain depth to bedrock.
- The potential for rocks or obstructions to pile driving in the existing fill.
- The stability of the slopes during construction.
- The design life of steel elements in salt water.

Each of these is more fully described below.

Depth to bedrock – The depth to bedrock is an important piece of information for final design and construction. It needs to be determined to a relatively high degree of accuracy for the design of pile foundations. The depth to bedrock will be one factor in determining the length of piling brought to the site. Variations between estimated and actual elevation by as little as 10 feet can have a major impact on cost. Also some of the alternatives include piling drilled and socketed into bedrock. In these cases the character and qualities of the bedrock need to be understood. Based on this, it is recommended that a geotechnical exploration program be undertaken as part of the design process. This should include a series of bore holes to and into bedrock.

Rocks or other obstructions in the existing fill – Rocks or obstructions in the fill can interfere with pile driving operations and in particular with driving flat sheets (such as those involved with a modified diaphragm dock.) When cell 4 failed there were a number of large rocks found in the fill that spilled out from the split in the cell. So there is documented history of these at the site. Based on this, it is recommended that the geotechnical investigation mentioned above include measures to characterize the fill including identifying the potential for rocks and obstructions. It is also recommended that the contract documents include bid items for contingent sum removal of obstructions.

Stability of the slopes during construction – The recent ADOT&PF ferry terminal reconstruction project outlined challenges with maintaining a slope in the tide zone during construction. It is recommended that temporary shoring and bracing be required in bid documents and that the contractor be required to provide a shoring and bracing plan for slope stabilization during construction.

Design life of steel elements in salt water – The project design life is 50 years. Achieving that will require measures to combat corrosion of steel in salt water. It is recommended that all steel items be hot dip galvanized. Hot dip galvanizing has an approximate 15 to 20-year service life when submerged in salt water. After this the galvanized coating will be consumed. It is also recommended that aluminum alloy sacrificial anodes be installed. Aluminum alloy anodes should be designed for an approximate 20 to 25-year service life. The owner should program replacement of the anodes at approximately 20 years.

12.0 NEXT STEPS – REVIEW AND APPROVAL PROCESS

The Haines Borough requested the Ports and Harbors Advisory Committee and Planning Commission to review the alternatives presented, including the engineering recommendation, to forward a recommendation for a preferred Alternative to replace the existing Lutak Dock. The Planning Commission and Ports and Harbors Advisory Committee have made formal recommendations to move the Preferred Alternative 1A forward.

The recommendation to move forward with the replacement of the Lutak Dock with the selected Preferred Alternative 1A will go before the Haines Borough Assembly for a public hearing and decision.

APPENDIX A

Lutak Dock Design and Development

Concepts Progress Drawings 12/23/16

LUTAK DOCK

DESIGN & DEVELOPMENT CONCEPTS

preliminary progress drawings
HAINES, ALASKA

12/23/2016 progress set

Mayor
Janice Hill

Director of Public Facilities
Brad Ryan

Harbormaster
Shawn Bell

Designed By:

R&M CONSULTANTS, INC.
9101 Vanguard Drive
Anchorage, Alaska 99507
rmconsult.com • email@rmconsult.com
phone: 907.522.1707 • fax: 907.522.3403
CORPORATE AUTHORIZATION NUMBER AECC111

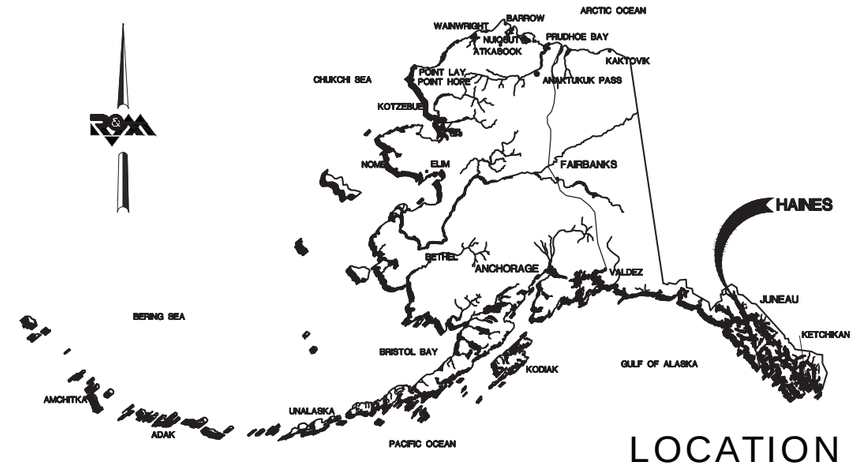

LOCATION

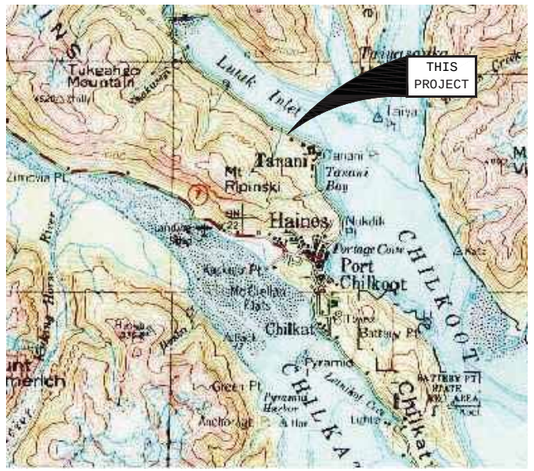

VICINITY

INDEX OF DRAWINGS

SHT	TITLE
G1.0	COVER
G2.0	ALTERNATIVES MATRIX
G3.0	DESIGN VESSELS AND VEHICLES
G4.0	EXISTING SITE PLAN
G4.1	EXISTING WHARF DETAILS
C1.0	ALTERNATIVE 1A - MODIFIED DIAPHRAGM
C1.1	ALTERNATIVE 1B - MODIFIED DIAPHRAGM
C1.2	ALTERNATIVE 1A - PLAN AND SECTIONS
C1.3	ALTERNATIVE 1B - PLAN
C1.4	ALTERNATIVE 1 - DETAILS
C1.5	ALTERNATIVE 1 - FENDER DETAILS
C1.6	BARGE RAMP SITE PLAN
C1.7	BARGE RAMP, DECK TRUSS AND TRANSFER BRIDGE
C1.8	BARGE RAMP - 3 PILE DOLPHIN DETAILS
C1.9	BARGE RAMP - DETAILS
C2.0	ALTERNATIVE 2 - PILE SUPPORTED DOCK
C2.1	ALTERNATIVE 2 - PILE DOCK PLAN AND ELEVATION
C2.2	ALTERNATIVE 2 - ABUTMENT SECTION
C2.3	ALTERNATIVE 2 - HAUNCHED DECK PANEL AND PILE CAP DETAILS
C3.0	ALTERNATIVE 3A - DOLPHIN FACE
C3.1	ALTERNATIVE 3B - DOLPHIN FACE
C3.2	ALTERNATIVE 3A - PLAN
C3.3	ALTERNATIVE 3B - PLAN
C3.4	ALTERNATIVE 3 - ELEVATION
C3.5	ALTERNATIVE 3 - 4 PILE DOLPHIN DETAILS
C3.6	ALTERNATIVE 3 - TENSION ANCHOR DETAILS
E100	SINGLE LINE DIAGRAM

INDEX

Z:\project\2443.01 Hb Haines Lutak Dock Study\Civil\ACAD\2443.01 - G1 Cover Sheet.dwg
Plotted 12/23/2016 9:35 AM by Jean Cumlat

ALTERNATIVES MATRIX:

ALT. NO.	DESCRIPTION	PROS	CONS	LEVEL OF SERVICE	CAPITAL COST
1A	ENCAPSULATE USING MODIFIED DIAPHRAGM	• EFFICIENT AND COST EFFECTIVE • MAINTAINS EXISTING FOOTPRINT • ACCOMMODATES CURRENT USERS INCLUDING PASS PASS CARGO OPERATIONS • RECLAIM ABOUT ½ ACRE UPLANDS AT CELLS 5, 6, AND 7	• PILE DRIVING RISK DURING CONSTRUCTION • ENCAPSULATES EXISTING SHEETS AND POOR QUALITY FILL	• HIGH	• $37,420,000
1B	ENCAPSULATE USING MODIFIED DIAPHRAGM	• EFFICIENT AND COST EFFECTIVE • MAINTAINS EXISTING FOOTPRINT • ACCOMMODATES CURRENT USERS INCLUDING PASS PASS CARGO OPERATIONS	• PILE DRIVING RISK DURING CONSTRUCTION • ENCAPSULATES EXISTING SHEETS AND POOR QUALITY FILL • DOES NOT RECLAIM UPLANDS AT CELLS 5, 6, AND 7	• HIGH	• $31,989,000
2	PLATFORM DOCK (STEEL PILE-SUPPORTED CONCRETE DECK)	• ALL NEW FACILITIES • HIGHER LEVEL OF SEISMIC PERFORMANCE • MAINTAINS EXISTING FOOTPRINT AND RECLAIMS ½ ACRE UPLANDS AT CELLS 5, 6, AND 7 • ACCOMMODATES CURRENT USERS INCLUDING PASS PASS CARGO OPERATIONS	• HIGHEST COST	• HIGH	• $61,840,000
3A	DOLPHINS AND TRANSFER BRIDGE	• ALL NEW FACILITIES	• LOSE APPROXIMATELY 1.7 ACRES OF UPLANDS • LOSE ABILITY TO USE PASS PASS FOR CARGO OPERATIONS • LOSE ABILITY TO SIDE LOAD OVER DOCK FACE	• MEDIUM	• $25,383,000
3B	DOLPHINS AND TRANSFER BRIDGE	• LEAST COST • ALL NEW FACILITIES	• LOSE APPROXIMATELY 1.7 ACRES OF UPLANDS • LOSE ABILITY TO USE PASS PASS FOR CARGO OPERATIONS • LOSE ABILITY TO SIDE LOAD OVER DOCK FACE • SERVICEABILITY LIMITED TO EXISTING FUEL AND CARGO BARGES	• MEDIUM	• $21,166,000

PROGRESS SET NOT FOR CONSTRUCTION

R&M CONSULTANTS, INC.
9101 Vanguard Drive
Anchorage, Alaska 99507
rmconsult.com• email@rmconsult.com
phone: 907.522.1707 • fax: 907.522.3403

CORPORATE AUTHORIZATION NUMBER AECC111

Haines Borough
LUTAK DOCK STUDY

No.	Description	Date

Drawn By: PMH/JVC
Checked By: JD/DA
Date: DEC 23, 2016
Phase: PRELIMINARY
Project No: 2443.01
SHEET TITLE: ALTERNATIVES MATRIX
SHEET NO: 2 OF 27
G2.0

Z:\project\2443.01 Hb Haines Lutak Dock Study\Civil\ACAD\2443.01 – G2.0 Notes.dwg
Plotted 12/23/2016 9:35 AM by Jean Cumlat

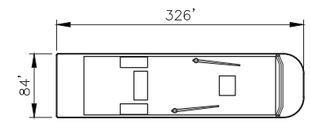

FUEL BARGE
1.) MAXIMUM DRAFT: 19'
2.) DISPLACEMENT: 15,000 SHORT TON

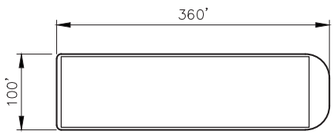

CARGO BARGE
1.) MAXIMUM DRAFT: 22'
2.) DISPLACEMENT: 23,000 SHORT TON

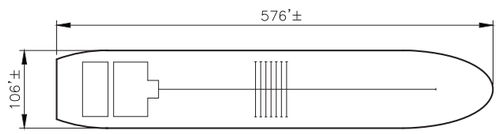

HMI CAPE LOOKOUT SHOALS (BULK TANKER)
1.) MAXIMUM DRAFT: 37'
2.) DISPLACEMENT: 54,000 SHORT TON

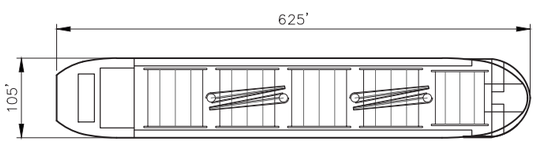

HANDY MAX (BULK CARGO)
1.) MAXIMUM DRAFT: 40'
2.) DISPLACEMENT: 40,000–50,000 SHORT TON

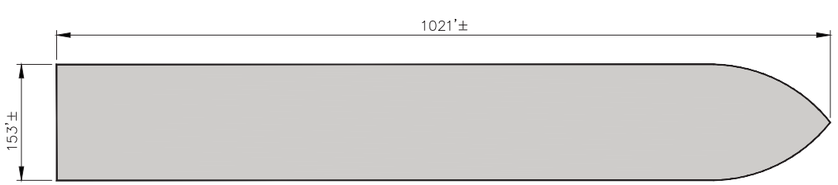

PASSENGER CRUISE LINER
1.) MAXIMUM DRAFT: 29'
2.) DISPLACEMENT: 64,474 SHORT TON

1 **DESIGN VESSELS**
Scale: 1:100

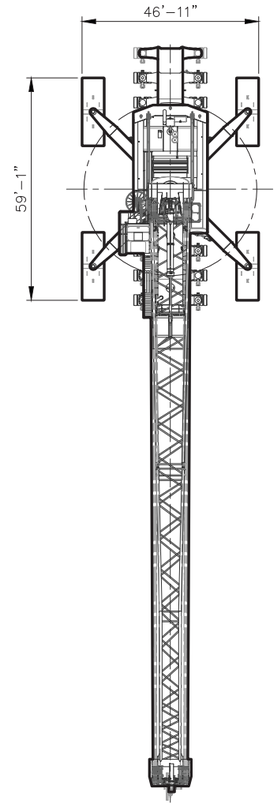

2 **LHM 420 - MOBILE HARBOR CRANE**
Scale: 1/16" = 1'-0"

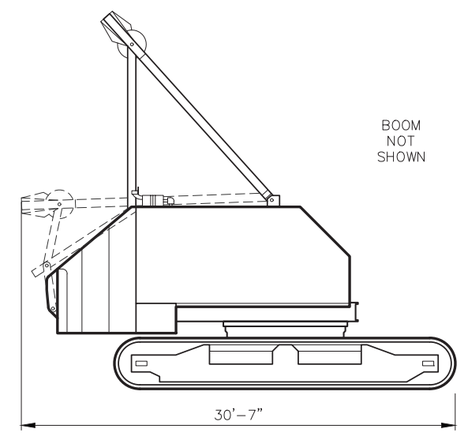

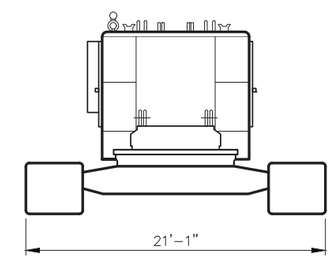

3 **MANITOWOC 4000 W**
Scale: 1/4" = 1'-0"

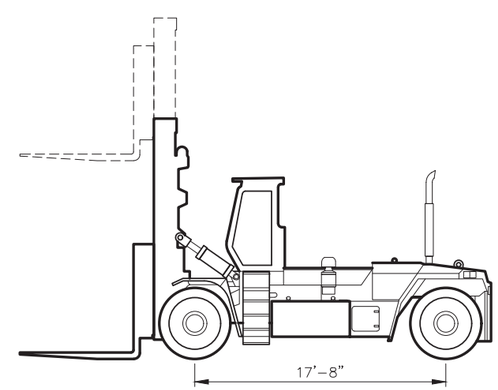

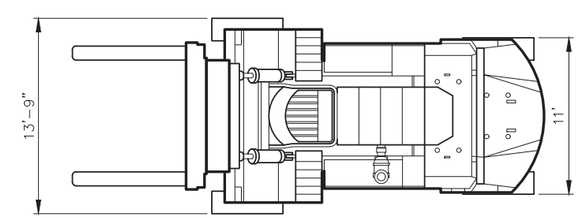

4 **HYSTER H800-1050HD/S FORKSLIFT**
Scale: 3/16" = 1'-0"

PROGRESS SET
NOT FOR
CONSTRUCTION

R&M CONSULTANTS, INC.
9101 Vanguard Drive
Anchorage, Alaska 99507
rmconsult.com• email@rmconsult.com
phone: 907.522.1707 • fax: 907.522.3403
CORPORATE AUTHORIZATION NUMBER AECC111

Haines Borough
LUTAK DOCK STUDY

No.	Description	Date

Drawn By: PMH/JVC
Checked By: JD/DA
Date: DEC 23, 2016
Phase: PRELIMINARY
Project No: 2443.01
SHEET TITLE: DESIGN VESSELS AND VEHICLES
SHEET NO: 3 OF 27
G3.0

Z:\project\2443.01 Hb Haines Lutak Dock Study\Civil\ACAD\2443.01 – G3.0 Design Vessels.dwg
Plotted 12/23/2016 9:36 AM by Jean Cumlat

1 **EXISTING SITE PLAN**

Scale: 1" = 100'

0 100 200
FEET

PROGRESS SET
NOT FOR
CONSTRUCTION

R&M CONSULTANTS, INC.
9101 Vanguard Drive
Anchorage, Alaska 99507
rmconsult.com• email@rmconsult.com
phone: 907.522.1707 • fax: 907.522.3403

CORPORATE AUTHORIZATION NUMBER AECC111

Haines Borough

LUTAK DOCK STUDY

No.	Description	Date

Drawn By: PMH/JVC
Checked By: JD/DA
Date: DEC 23, 2016
Phase: PRELIMINARY
Project No: 2443.01
SHEET TITLE: EXISTING SITE PLAN

SHEET NO: 4 OF 27

G4.0

Z:\project\2443.01 Hb Haines Lutak Dock Study\Civil\ACAD\2443.01 – G4.0 Existing Site Plan.dwg

Plotted 12/23/2016 9:37 AM by Jean Cumlat

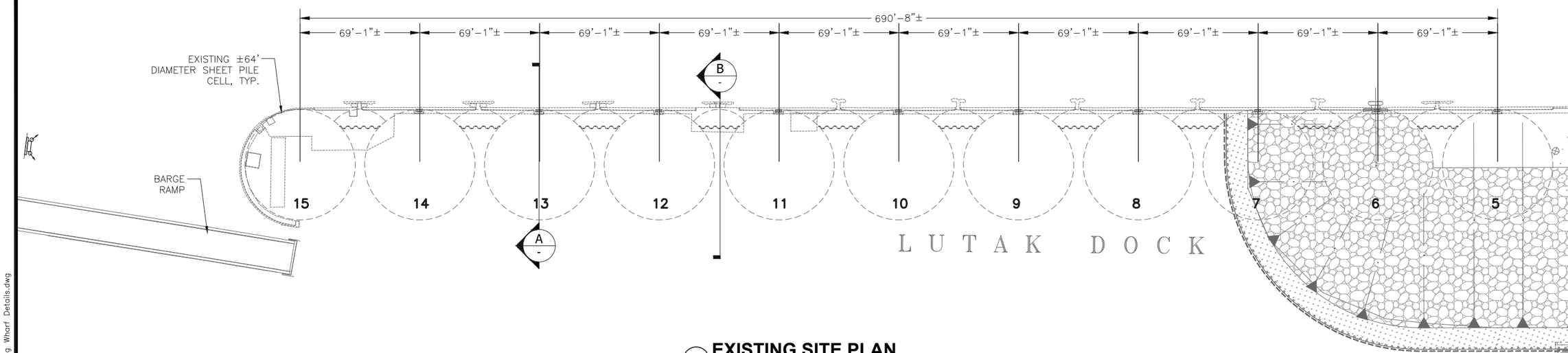

1 **EXISTING SITE PLAN**
Scale: 1" = 30'

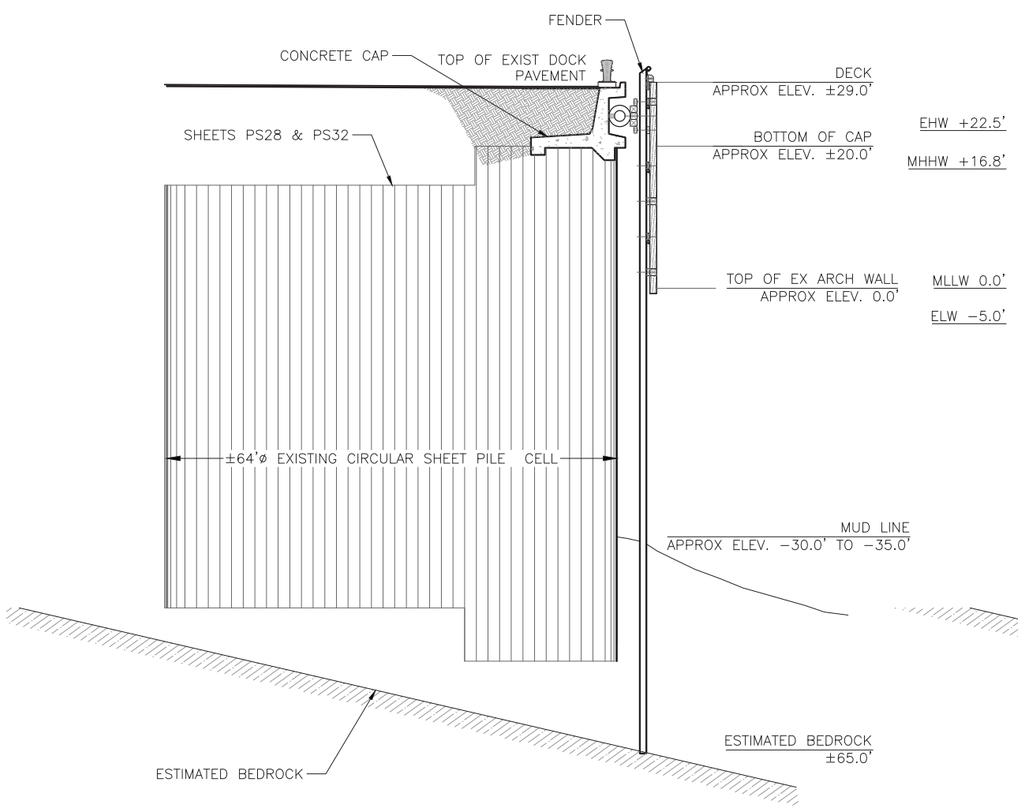

A **EXISTING WHARF AT CENTER OF CELL**
Scale: 3/32" = 1'-0"

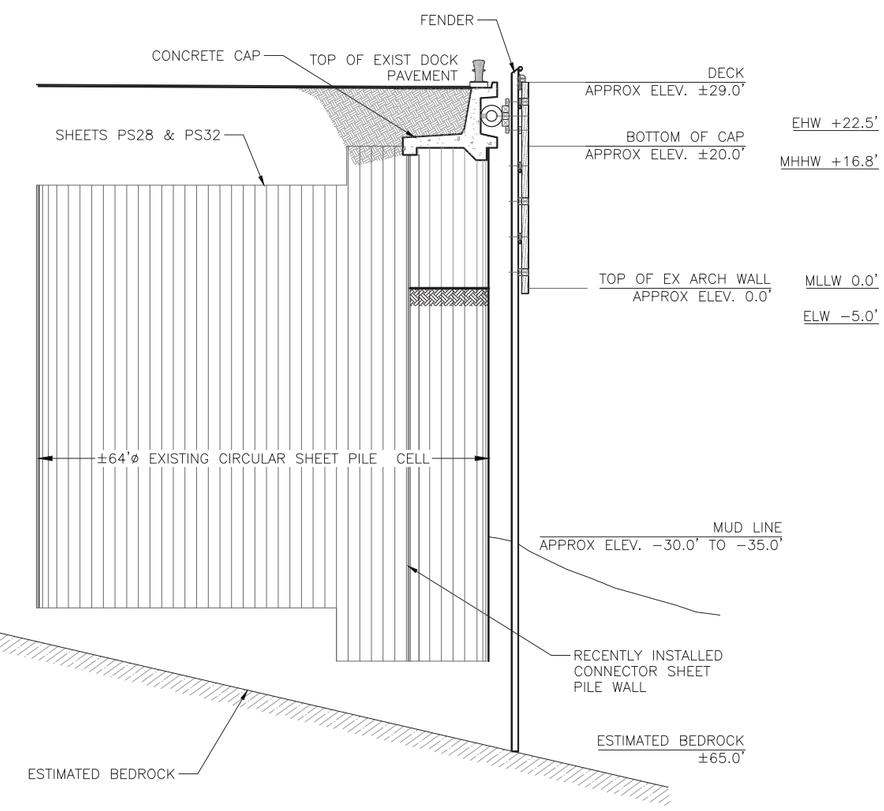

B **EXISTING WHARF SECTION AT CLOSURE ARC**
Scale: 3/32" = 1'-0"

0 30 60
FEET

PROGRESS SET NOT FOR CONSTRUCTION

R&M CONSULTANTS, INC.
9101 Vanguard Drive
Anchorage, Alaska 99507
rmconsult.com• email@rmconsult.com
phone: 907.522.1707 • fax: 907.522.3403
CORPORATE AUTHORIZATION NUMBER AECC111

Haines Borough
LUTAK DOCK STUDY

No.	Description	Date

Drawn By: PMH/JVC
Checked By: JD/DA
Date: DEC 23, 2016
Phase: PRELIMINARY
Project No: 2443.01
SHEET TITLE: EXISTING WHARF DETAILS
SHEET NO: 5 OF 27
G4.1

Z:\project\2443.01 Hb Haines Lutak Dock Study\Civil\ACAD\2443.01 – G4.1 Existing Wharf Details.dwg
Plotted 12/23/2016 9:37 AM by Jean Cumlat

CONCEPT COST ESTIMATE:

NO.	PAY ITEM DESCRIPTION	UNIT	QUANTITY	UNIT PRICE	AMOUNT
1	MOB AND DEMOB	LS	1	$3,000,000	$3,000,000
2	CONSTRUCTION SURVEY	LS	1	$180,000	$180,000
3	PROTECTED SPECIES OBSERVER	LS	1	$120,000	$120,000
4	EROSION AND POLLUTION CONTROL	LS	1	$31,250	$31,250
5	SILT CURTAIN - BOOM	LS	1	$120,000	$120,000
	SUB TOTAL MOB AND DEMOB				**$3,451,250**
6	DEMOLITION OF PILE CAPS AND MISC STRUCTURE	LF	770	$510	$392,700
7	DEMOLITION OF DOLPHINS AND EXISTING STRUCTURE	LS	1	$50,000	$50,000
8	DEMOLITION OF CLOSURE ARCS	EA	10	$25,000	$250,000
9	SALVAGE EXISTING FENDERS	EA	11	$2,000	$22,000
10	SALVAGE EXISTING FENDER PILES	EA	22	$2,500	$55,000
11	EXCAVATION AND DISPOSAL OF EXISTING FILL	CY	72,157	$15	$1,082,355
12	DREDGING AND DISPOSAL	CY	34,369	$24	$824,856
	SUB TOTAL DEMOLITION				**$2,676,911**
13	FURNISH PS-31 SHEET PILING	SF	210,495	$34	$7,156,830
14	INSTALL PS-31 SHEET PILING, PER PAIR	EA	802	$2,500	$2,005,000
15	FURNISH AND INSTALL POROUS BACKFILL	CY	24,845	$40	$993,800
16	FURNISH AND INSTALL SELECT MATERIAL TYPE A	CY	48,770	$20	$975,400
17	FURNISH AND INSTALL SUBBASE GRADING TYPE B	CY	7,049	$25	$176,225
18	FURNISH AND INSTALL LEVELING COURSE D-1	CY	1,177	$40	$47,080

NO.	PAY ITEM DESCRIPTION	UNIT	QUANTITY	UNIT PRICE	AMOUNT
19	FURNISH 16" DIAMETER FACE BEAM PILING	LF	2,263	$91	$205,933
20	INSTALL 16" DIAMETER FACE BEAM PILING	EA	31	$3,900	$120,900
21	FURNISH 18" DIAMETER PILING	LF	1,119	$128	$143,232
22	INSTALL 18" DIAMETER FACE BEAM PILING	EA	11	$4,000	$44,000
23	INSTALL 18" DIAMETER PILING IN ROCK SOCKET	EA	6	$20,000	$120,000
24	FURNISH AND INSTALL FACE BEAM AND BULLRAIL	CY	1,142	$2,000	$2,284,000
25	INSTALL SALVAGED FENDERS	EA	11	$6,000	$66,000
26	INSTALL SALVAGED FENDER PILES	EA	22	$2,500	$55,000
27	FURNISH AND INSTALL BOLLARDS	EA	11	$10,000	$110,000
28	FURNISH AND INSTALL LIFE RINGS	EA	5	$1,200	$6,000
29	FURNISH AND INSTALL FIRE EXTINGUISHERS	EA	5	$1,200	$6,000
30	FURNISH AND INSTALL FIRE STANDPIPE	LF	1,000	$120	$120,000
31	FURNISH AND INSTALL 150# ANODES	EA	769	$1,200	$922,800
32	FURNISH 30" DIAMETER PILING	LF	880	$258	$227,040
33	INSTALL 30" DIAMETER PILING IN ROCK SOCKET	EA	17	$25,000	$425,000
34	FURNISH AND INSTALL TENSION ANCHOR	EA	23	$35,000	$805,000
35	FURNISH AND INSTALL BARGE BERTH ABUTMENT PILE CAP	LS	1	$30,000	$30,000
36	FURNISH AND INSTALL BARGE TRANSFER BRIDGE	LS	1	$1,120,000	$1,120,000
37	FURNISH AND INSTALL 3 PILE DOLPHINS	EA	3	$140,000	$420,000
38	FURNISH AND INSTALL 4 PILE DOLPHINS	EA	2	$210,000	$420,000
39	ELECTRICAL AND LIGHTING	LS	1	$315,600	$315,600
	SUB TOTAL CONSTRUCTION				**$19,320,840**

NO.	PAY ITEM DESCRIPTION	UNIT	QUANTITY	UNIT PRICE	AMOUNT
	TOTAL CONSTRUCTION				**$25,449,001**
A	DESIGN UPLAND SURVEY	LS	1	$55,000	$55,000
B	DESIGN HYDROGRAPHIC SURVEY	LS	1	$20,000	$20,000
C	DESIGN GEOTECH PROGRAM	LS	1	$140,000	$140,000
D	DESIGN (10% OF CONSTRUCTION)	LS	1	$2,544,900	$2,544,900
E	PERMITTING CLEAN WATER ACT SECTION 10 AND 404	LS	1	$20,000	$20,000
F	PERMITTING NMFS IHA	LS	1	$80,000	$80,000
G	PERMITTING NEPA	LS	1	$100,000	$100,000
H	CONSTRUCTION ADMINISTRATION (6% OF CONSTRUCTION)	LS	1	$1,526,940	$1,526,940
	SUB TOTAL ENGINEERING AND ADMIN				**$4,486,840**
				TOTAL CONSTRUCTION & ENGINEERING COST:	$29,935,841
				25% CONTINGENCY:	$7,483,960
				TOTAL:	$37,420,000

ALTERNATIVE 1A - MODIFIED DIAPHRAGM

PROGRESS SET NOT FOR CONSTRUCTION

R&M CONSULTANTS, INC.
9101 Vanguard Drive
Anchorage, Alaska 99507
rmconsult.com• email@rmconsult.com
phone: 907.522.1707 • fax: 907.522.3403

CORPORATE AUTHORIZATION NUMBER AECC111

Haines Borough

LUTAK DOCK STUDY

No.	Description	Date

Drawn By: PMH/JVC
Checked By: JD/DA
Date: DEC 23, 2016
Phase: PRELIMINARY
Project No: 2443.01
SHEET TITLE: ALTERNATIVE 1A - MODIFIED DIAPHRAGM
SHEET NO: 6 OF 27
C1.0

Z:\project\2443.01 Hb Haines Lutak Dock Study\Civil\ACAD\2443.01 – C1.0 Alternative 1A And 1B Description.dwg
Plotted 12/23/2016 9:37 AM by Jean Cumlat

CONCEPT COST ESTIMATE:

NO.	PAY ITEM DESCRIPTION	UNIT	QUANTITY	UNIT PRICE	AMOUNT
1	MOB AND DEMOB	LS	1	$3,000,000	$3,000,000
2	CONSTRUCTION SURVEY	LS	1	$180,000	$180,000
3	PROTECTED SPECIES OBSERVER	LS	1	$120,000	$120,000
4	EROSION AND POLLUTION CONTROL	LS	1	$31,250	$31,250
5	SILT CURTAIN - BOOM	LS	1	$120,000	$120,000
	SUB TOTAL MOB AND DEMOB				**$3,451,250**
6	DEMOLITION OF PILE CAPS AND MISC STRUCTURE	LF	770	$510	$392,700
7	DEMOLITION OF DOLPHINS AND EXISTING STRUCTURE	LS	1	$50,000	$50,000
8	DEMOLITION CLOSURE ARCS	EA	8	$25,000	$200,000
9	SALVAGE EXISTING FENDERS	EA	11	$2,000	$22,000
10	SALVAGE EXISTING FENDER PILES	EA	22	$2,500	$55,000
11	EXCAVATION AND DISPOSAL OF EXISTING FILL	CY	72,157	$15	$1,082,355
12	DREDGING AND DISPOSAL	CY	34,369	$24	$824,856
	SUB TOTAL DEMOLITION				**$2,626,911**
13	FURNISH PS-31 SHEET PILING	SF	161,855	$34	$5,503,070
14	INSTALL PS-31 SHEET PILING, PER PAIR	EA	617	$2,500	$1,542,500
15	FURNISH AND INSTALL POROUS BACKFILL	CY	19,479	$40	$779,160
16	FURNISH AND INSTALL SELECT MATERIAL TYPE A	CY	36,648	$20	$732,960
17	FURNISH AND INSTALL SUBBASE GRADING TYPE B	CY	5,035	$25	$125,875
18	FURNISH AND INSTALL LEVELING COURSE D-1	CY	841	$40	$33,640

NO.	PAY ITEM DESCRIPTION	UNIT	QUANTITY	UNIT PRICE	AMOUNT
19	FURNISH 16" DIAMETER FACE BEAM PILING	LF	1,680	$91	$152,880
20	INSTALL 16" DIAMETER FACE BEAM PILING	EA	23	$3,900	$89,700
21	FURNISH 18" DIAMETER PILING	LF	900	$128	$115,200
22	INSTALL 18" DIAMETER FACE BEAM PILING	EA	8	$4,000	$32,000
23	INSTALL 18" DIAMETER PILING IN ROCK SOCKET	EA	6	$20,000	$120,000
24	FURNISH AND INSTALL FACE BEAM AND BULLRAIL	CY	817	$2,000	$1,634,000
25	INSTALL SALVAGED FENDERS	EA	8	$6,000	$48,000
26	INSTALL SALVAGED FENDER PILES	EA	16	$2,500	$40,000
27	FURNISH AND INSTALL BOLLARDS	EA	8	$10,000	$80,000
28	FURNISH AND INSTALL LIFE RINGS	EA	5	$1,200	$6,000
29	FURNISH AND INSTALL FIRE EXTINGUISHERS	EA	5	$1,200	$6,000
30	FURNISH AND INSTALL FIRE STANDPIPE	LF	700	$120	$84,000
31	FURNISH AND INSTALL 150# ANODES	EA	615	$1,200	$738,000
32	FURNISH 30" DIAMETER PILING	LF	880	$258	$227,040
33	INSTALL 30" DIAMETER PILING IN ROCK SOCKET	EA	17	$25,000	$425,000
34	FURNISH AND INSTALL TENSION ANCHOR	EA	23	$35,000	$805,000
35	FURNISH AND INSTALL BARGE BERTH ABUTMENT PILE CAP	LS	1	$30,000	$30,000
36	FURNISH AND INSTALL BARGE TRANSFER BRIDGE	LS	1	$1,120,000	$1,120,000
37	FURNISH AND INSTALL 3 PILE DOLPHINS	EA	3	$140,000	$420,000
38	FURNISH AND INSTALL 4 PILE DOLPHINS	EA	2	$210,000	$420,000
39	ELECTRICAL AND LIGHTING	LS	1	$315,600	$315,600
	SUB TOTAL CONSTRUCTION				**$15,625,625**

NO.	PAY ITEM DESCRIPTION	UNIT	QUANTITY	UNIT PRICE	AMOUNT
	TOTAL CONSTRUCTION				**$21,703,786**
A	DESIGN UPLAND SURVEY	LS	1	$55,000	$55,000
B	DESIGN HYDROGRAPHIC SURVEY	LS	1	$20,000	$20,000
C	DESIGN GEOTECH PROGRAM	LS	1	$140,000	$140,000
D	DESIGN (10% OF CONSTRUCTION)	LS	1	$2,170,379	$2,170,379
E	PERMITTING CLEAN WATER ACT SECTION 10 AND 404	LS	1	$20,000	$20,000
F	PERMITTING NMFS IHA	LS	1	$80,000	$80,000
G	PERMITTING NEPA	LS	1	$100,000	$100,000
H	CONSTRUCTION ADMINISTRATION (6% OF CONSTRUCTION)	LS	1	$1,302,227	$1,302,227
	SUB TOTAL ENGINEERING AND ADMIN				**$3,887,606**
				TOTAL CONSTRUCTION & ENGINEERING COST:	$25,591,392
				25% CONTINGENCY:	$6,397,848
				TOTAL:	$31,989,000

ALTERNATIVE 1B - MODIFIED DIAPHRAGM

PROGRESS SET NOT FOR CONSTRUCTION

R&M CONSULTANTS, INC.
9101 Vanguard Drive
Anchorage, Alaska 99507
rmconsult.com• email@rmconsult.com
phone: 907.522.1707 • fax: 907.522.3403

CORPORATE AUTHORIZATION NUMBER AECC111

Haines Borough
LUTAK DOCK STUDY

No.	Description	Date

Drawn By: PMH/JVC
Checked By: JD/DA
Date: DEC 23, 2016
Phase: PRELIMINARY
Project No: 2443.01
SHEET TITLE: ALTERNATIVE 1B - MODIFIED DIAPHRAGM
SHEET NO: 7 OF 27
C1.1

Z:\project\2443.01 Hb Haines Lutak Dock Study\Civil\ACAD\2443.01 – C1.0 Alternative 1A And 1B Description.dwg
Plotted 12/23/2016 9:37 AM by Jean Cumlat

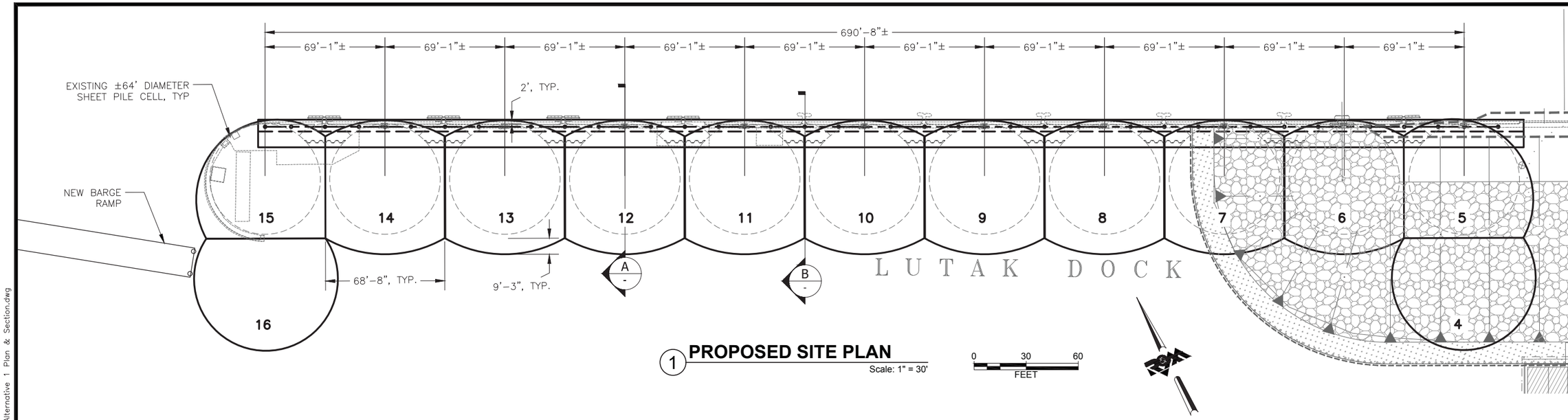

1 **PROPOSED SITE PLAN**

Scale: 1" = 30'

0 30 60 FEET

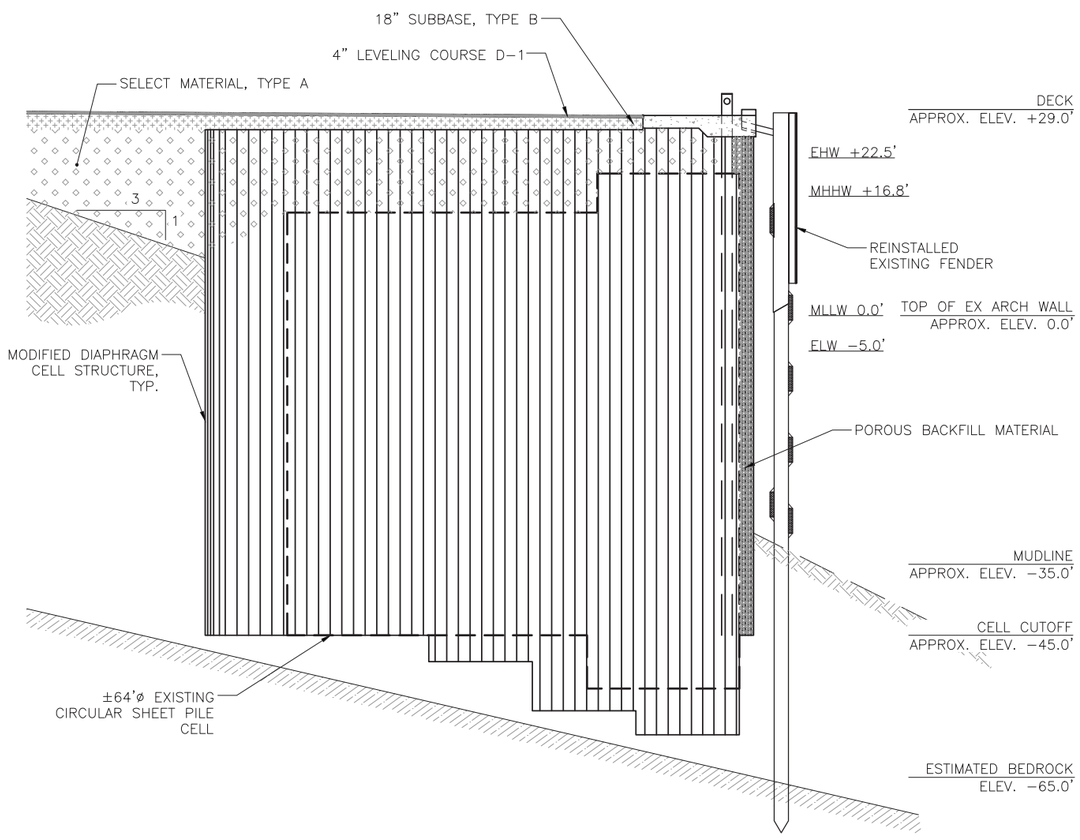

A **SECTION AT CENTER OF CELL**

Scale: 3/32" = 1'-0"

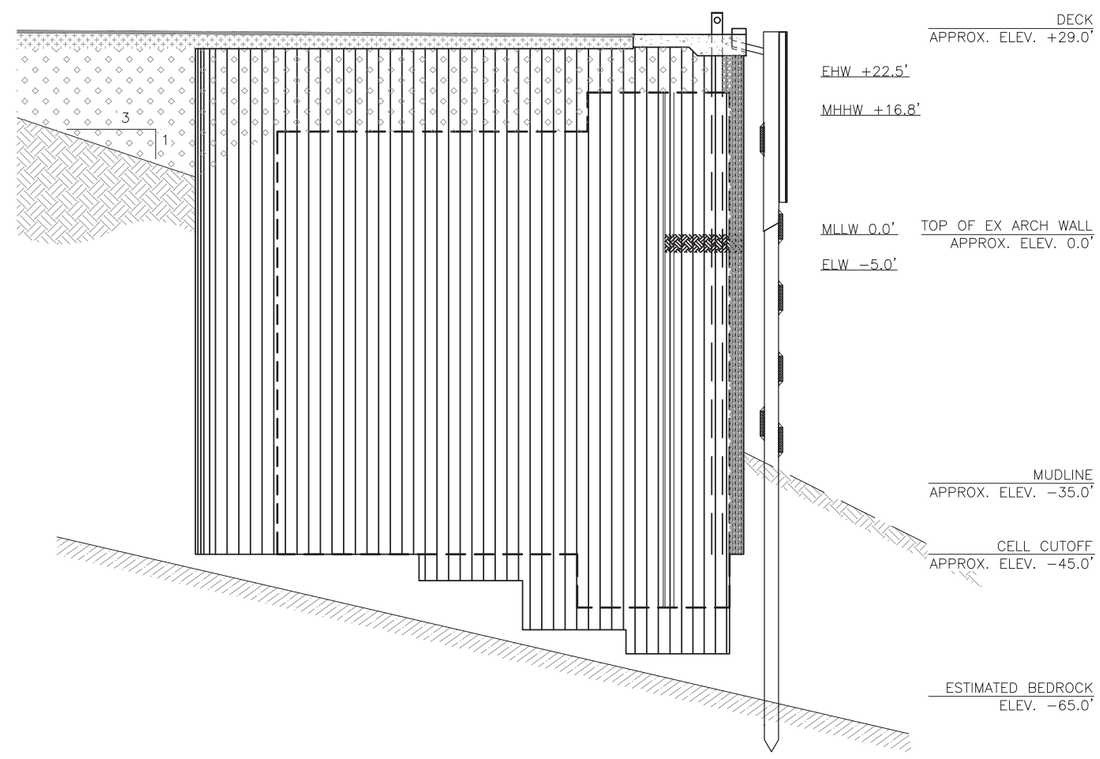

B **SECTION AT CLOSURE ARC**

Scale: 3/32" = 1'-0"

PROGRESS SET NOT FOR CONSTRUCTION

R&M CONSULTANTS, INC.
9101 Vanguard Drive
Anchorage, Alaska 99507
rmconsult.com• email@rmconsult.com
phone: 907.522.1707 • fax: 907.522.3403
CORPORATE AUTHORIZATION NUMBER AECC111

Haines Borough

LUTAK DOCK STUDY

No.	Description	Date

Drawn By: PMH/JVC
Checked By: JD/DA
Date: DEC 23, 2016
Phase: PRELIMINARY
Project No: 2443.01
SHEET TITLE: ALTERNATIVE 1A - PLAN AND SECTIONS

SHEET NO: 8 OF 27

C1.2

Z:\project\2443.01 Hb Haines Lutak Dock Study\Civil\ACAD\2443.01 – C1.2 Alternative 1 Plan & Section.dwg
Plotted 12/23/2016 9:38 AM by Jean Cumlat

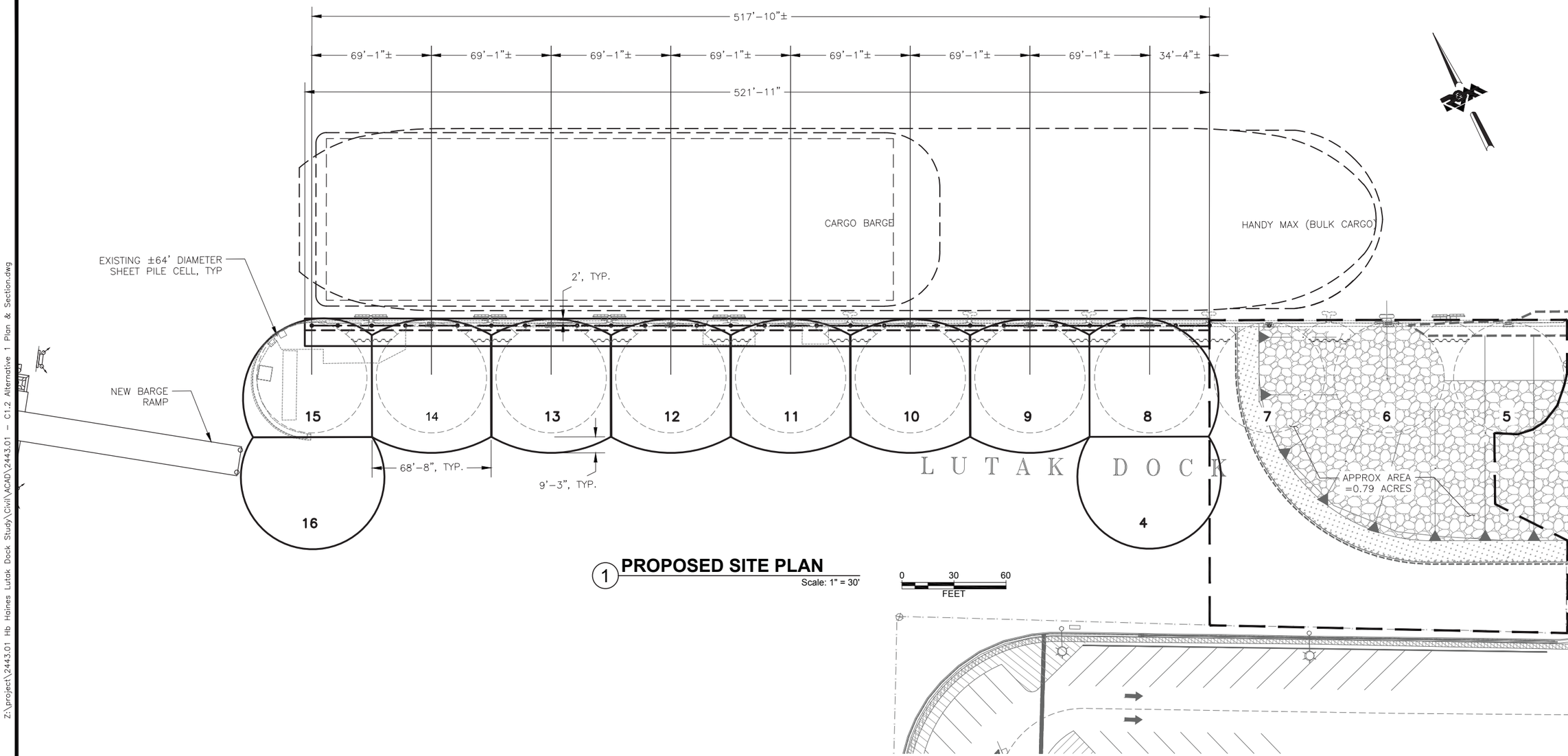

1 **PROPOSED SITE PLAN**

Scale: 1" = 30'

PROGRESS SET NOT FOR CONSTRUCTION

R&M CONSULTANTS, INC.
9101 Vanguard Drive
Anchorage, Alaska 99507
rmconsult.com• email@rmconsult.com
phone: 907.522.1707 • fax: 907.522.3403

CORPORATE AUTHORIZATION NUMBER AECC111

Haines Borough

LUTAK DOCK STUDY

HAINES BOROUGH ALASKA

No.	Description	Date

Drawn By: PMH/JVC
Checked By: JD/DA
Date: DEC 23, 2016
Phase: PRELIMINARY
Project No: 2443.01
SHEET TITLE: ALTERNATIVE 1B - PLAN
SHEET NO: 9 OF 27

C1.3

Z:\project\2443.01 Hb Haines Lutak Dock Study\Civil\ACAD\2443.01 - C1.2 Alternative 1 Plan & Section.dwg

Plotted 12/23/2016 9:38 AM by Jean Cumlat

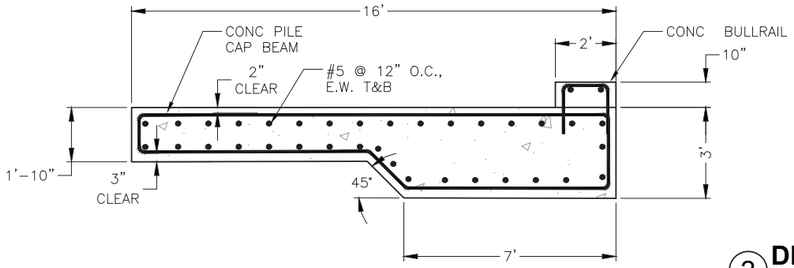

1 PILE CAP REBAR DETAIL

Scale: 1" = 30'

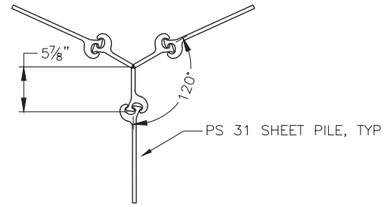

2 DIAPHRAGM CELL CONNECTION

Scale: 1" = 10'

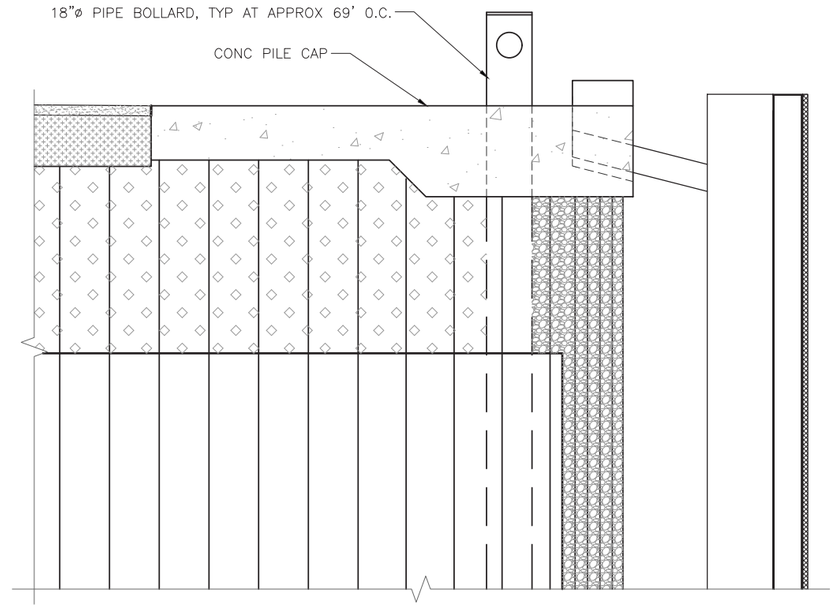

3 BOLLARD THROUGH PILE CAP

Scale: 1" = 30'

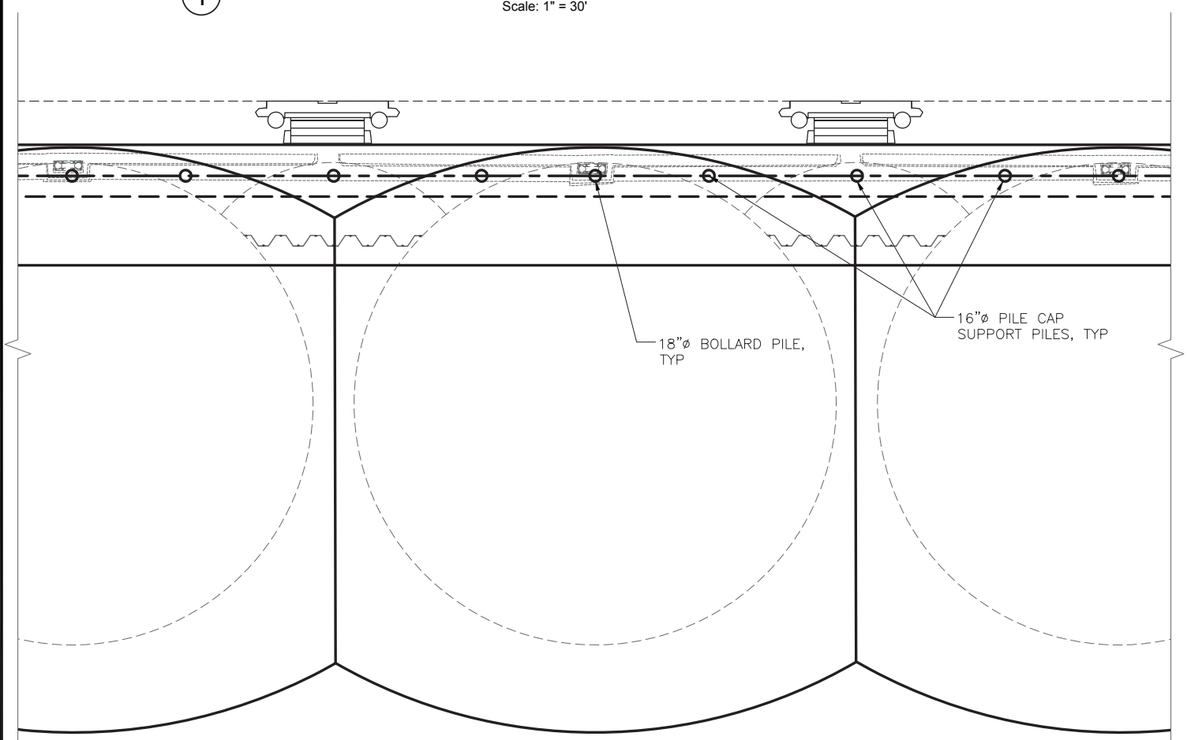

4 PILE CAP PLAN

Scale: 1" = 10'

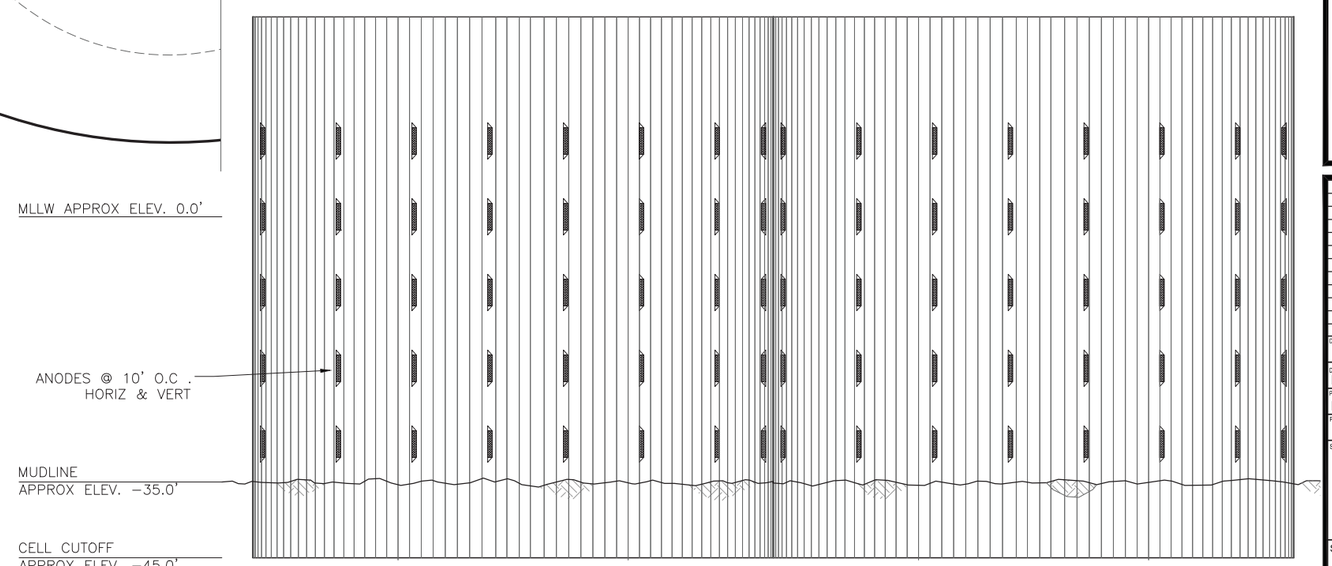

5 ANODE DETAIL - TYPICAL SHEET PILE

Scale: 1" = 10'

PROGRESS SET
NOT FOR
CONSTRUCTION

R&M CONSULTANTS, INC.
9101 Vanguard Drive
Anchorage, Alaska 99507
rmconsult.com• email@rmconsult.com
phone: 907.522.1707 • fax: 907.522.3403

CORPORATE AUTHORIZATION NUMBER AECC111

Haines Borough
LUTAK DOCK STUDY

No.	Description	Date

Drawn By: PMH/JVC
Checked By: JD/DA
Date: DEC 23, 2016
Phase: PRELIMINARY
Project No: 2443.01
SHEET TITLE: ALTERNATIVE 1 - DETAILS
SHEET NO: 10 OF 27
C1.4

Z:\project\2443.01 Hb Haines Lutak Dock Study\Civil\ACAD\2443.01 - C1.2 Alternative 1 Plan & Section.dwg
Plotted 12/23/2016 9:38 AM by Jean Cumlat

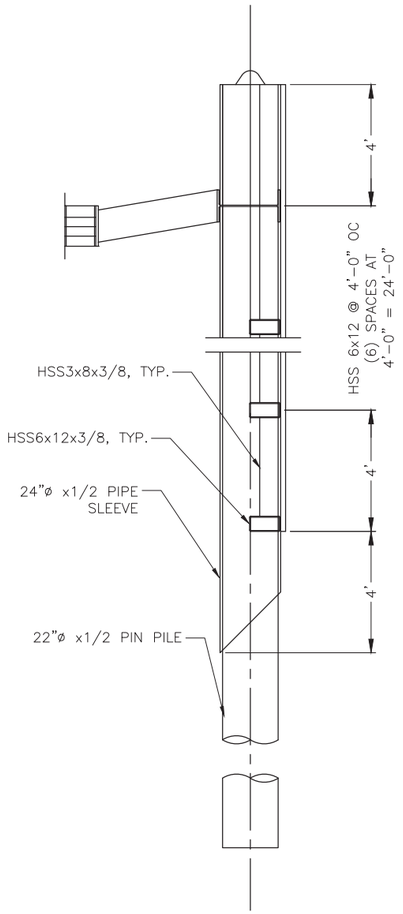

1 **EXISTING FENDER SECTION**
Scale: 1" = 30'

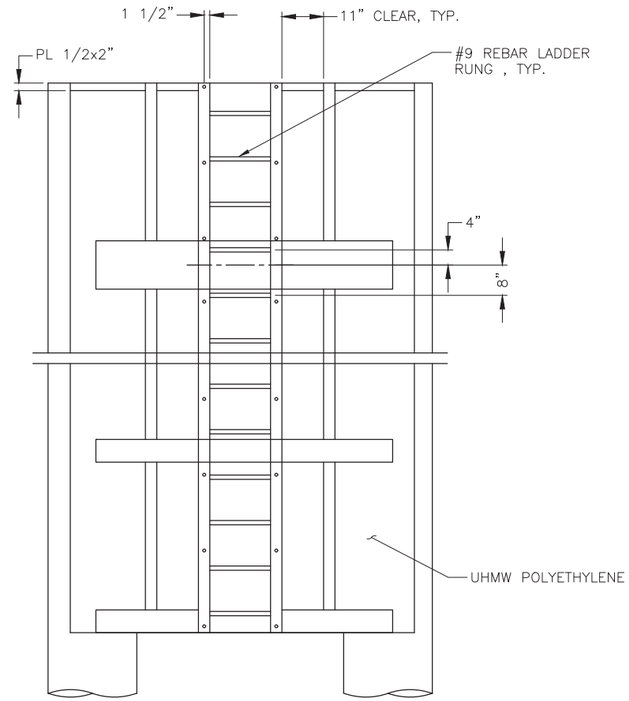

2 **FENDER FACE ELEVATION**
Scale: 1" = 20'

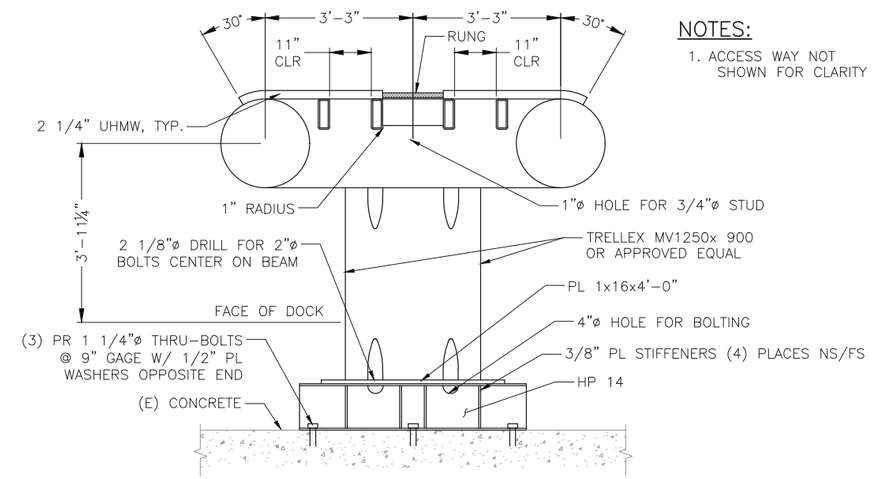

3 **FENDER PLAN**
Scale: 1" = 20'

NOTES:

1. ACCESS WAY NOT SHOWN FOR CLARITY

PROGRESS SET NOT FOR CONSTRUCTION

R&M CONSULTANTS, INC.
9101 Vanguard Drive
Anchorage, Alaska 99507
rmconsult.com• email@rmconsult.com
phone: 907.522.1707 • fax: 907.522.3403

CORPORATE AUTHORIZATION NUMBER AECC111

Haines Borough

LUTAK DOCK STUDY

No.	Description	Date

Drawn By: PMH/JVC
Checked By: JD/DA
Date: DEC 23, 2016
Phase: PRELIMINARY
Project No: 2443.01
SHEET TITLE: ALTERNATIVE 1 - FENDER DETAILS
SHEET NO: 11 OF 27
C1.5

Z:\project\2443.01 Hb Haines Lutak Dock Study\Civil\ACAD\2443.01 - C1.2 Alternative 1 Plan & Section.dwg
Plotted 12/23/2016 9:38 AM by Jean Cumlat

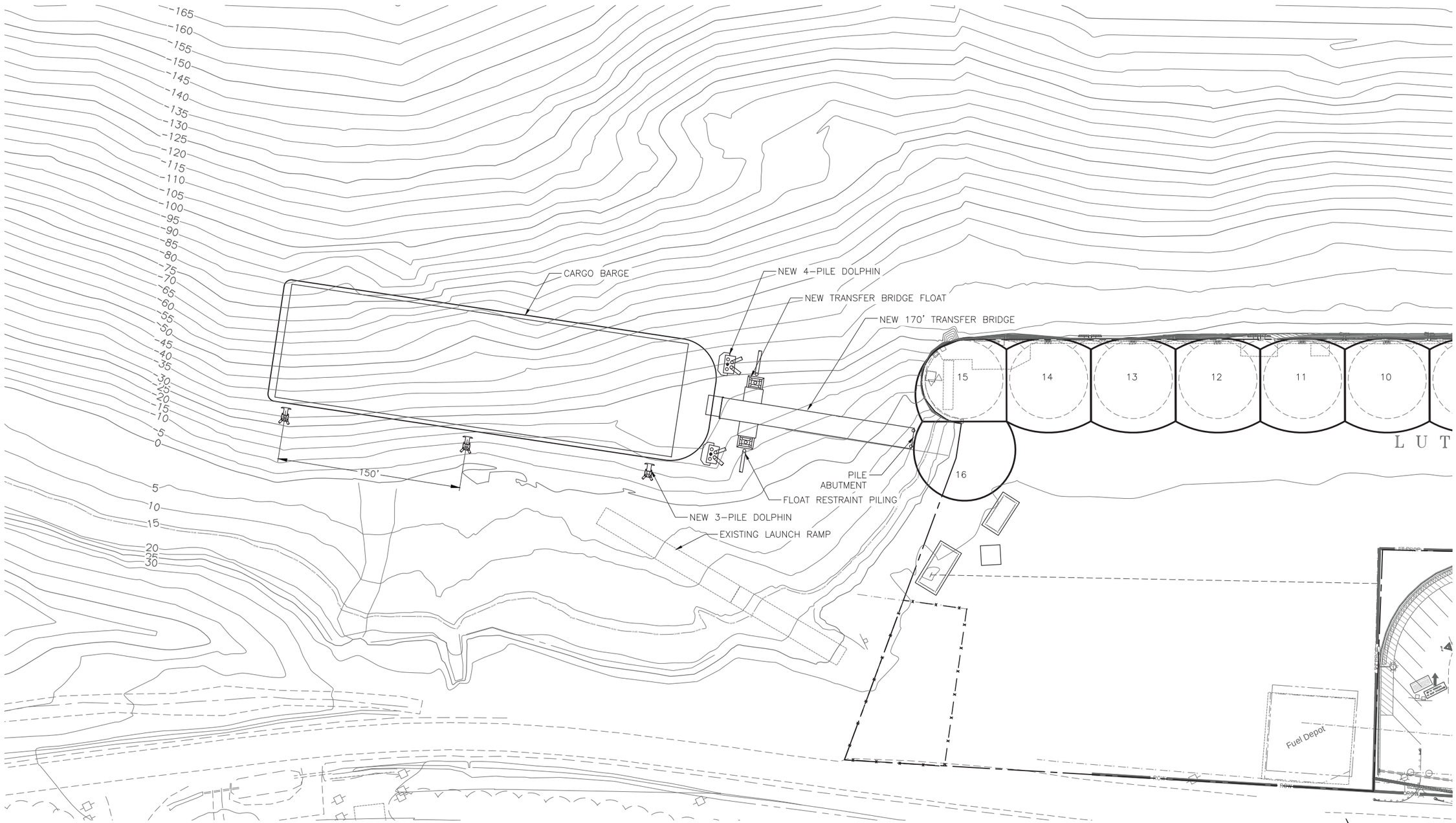

1 **BARGE RAMP SITE PLAN**

Scale: 1" = 40'

PROGRESS SET NOT FOR CONSTRUCTION

R&M CONSULTANTS, INC.
9101 Vanguard Drive
Anchorage, Alaska 99507
rmconsult.com• email@rmconsult.com
phone: 907.522.1707 • fax: 907.522.3403

CORPORATE AUTHORIZATION NUMBER AECC111

Haines Borough

LUTAK DOCK STUDY

No.	Description	Date

Drawn By: PMH/JVC
Checked By: JD/DA
Date: DEC 23, 2016
Phase: PRELIMINARY
Project No: 2443.01
SHEET TITLE: BARGE RAMP SITE PLAN

SHEET NO: 12 OF 27

C1.6

Z:\project\2443.01 Hb Haines Lutak Dock Study\Civil\ACAD\2443.01 – C1.6 – Barge Ramp Site Plan.dwg

Plotted 12/23/2016 9:39 AM by Jean Cumlat

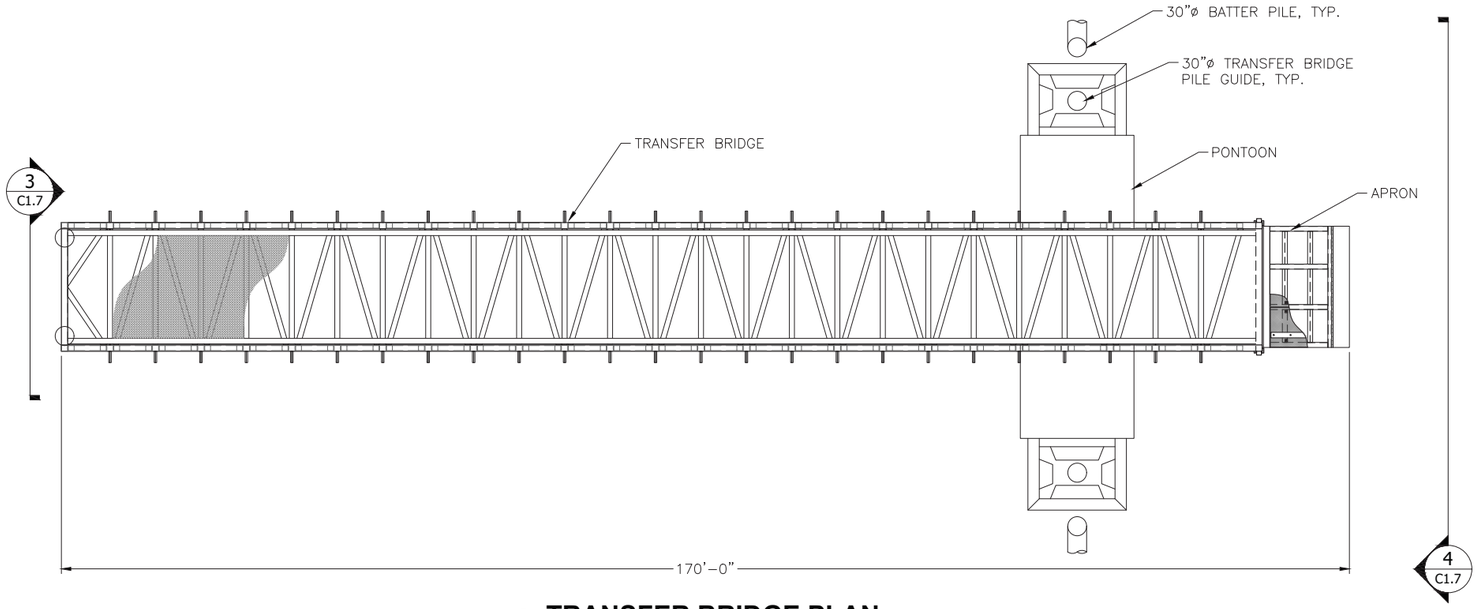

1 **TRANSFER BRIDGE PLAN**
Scale: 1" = 10'

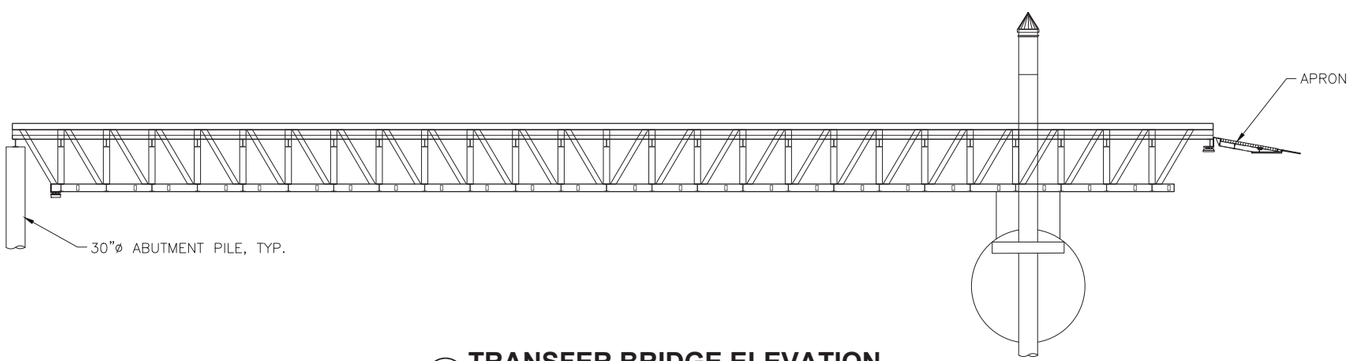

2 **TRANSFER BRIDGE ELEVATION**
Scale: 1" = 10'

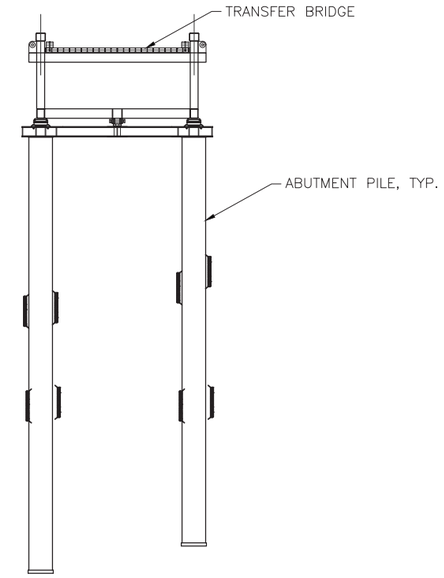

3 **ABUTMENT ELEVATION**
Scale: 1" = 8"

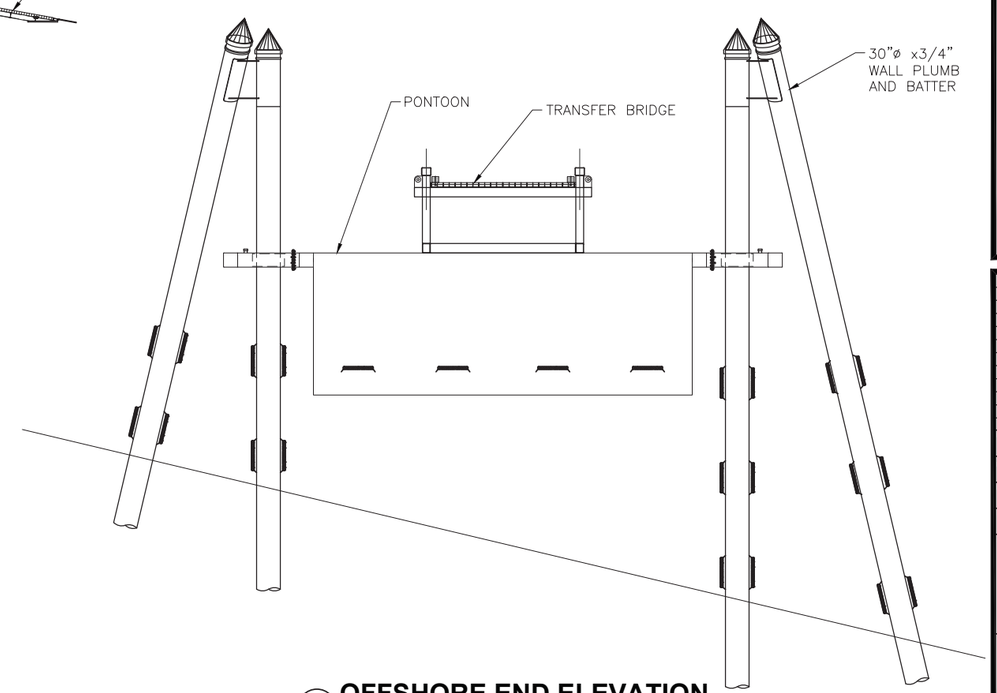

4 **OFFSHORE END ELEVATION**
Scale: 1" = 8'

PROGRESS SET NOT FOR CONSTRUCTION

R&M CONSULTANTS, INC.
9101 Vanguard Drive
Anchorage, Alaska 99507
rmconsult.com• email@rmconsult.com
phone: 907.522.1707 • fax: 907.522.3403
CORPORATE AUTHORIZATION NUMBER AECC111

Haines Borough
LUTAK DOCK STUDY

No.	Description	Date

Drawn By: PMH/JVC
Checked By: JD/DA
Date: DEC 23, 2016
Phase: PRELIMINARY
Project No: 2443.01
SHEET TITLE: BARGE RAMP, DECK TRUSS AND TRANSFER BRIDGE
SHEET NO: 13 OF 27
C1.7

Z:\project\2443.01 Hb Haines Lutak Dock Study\Civil\ACAD\2443.01 – C1.7 – Barge Ramp Details.dwg
Plotted 12/23/2016 9:39 AM by Jean Cumlat

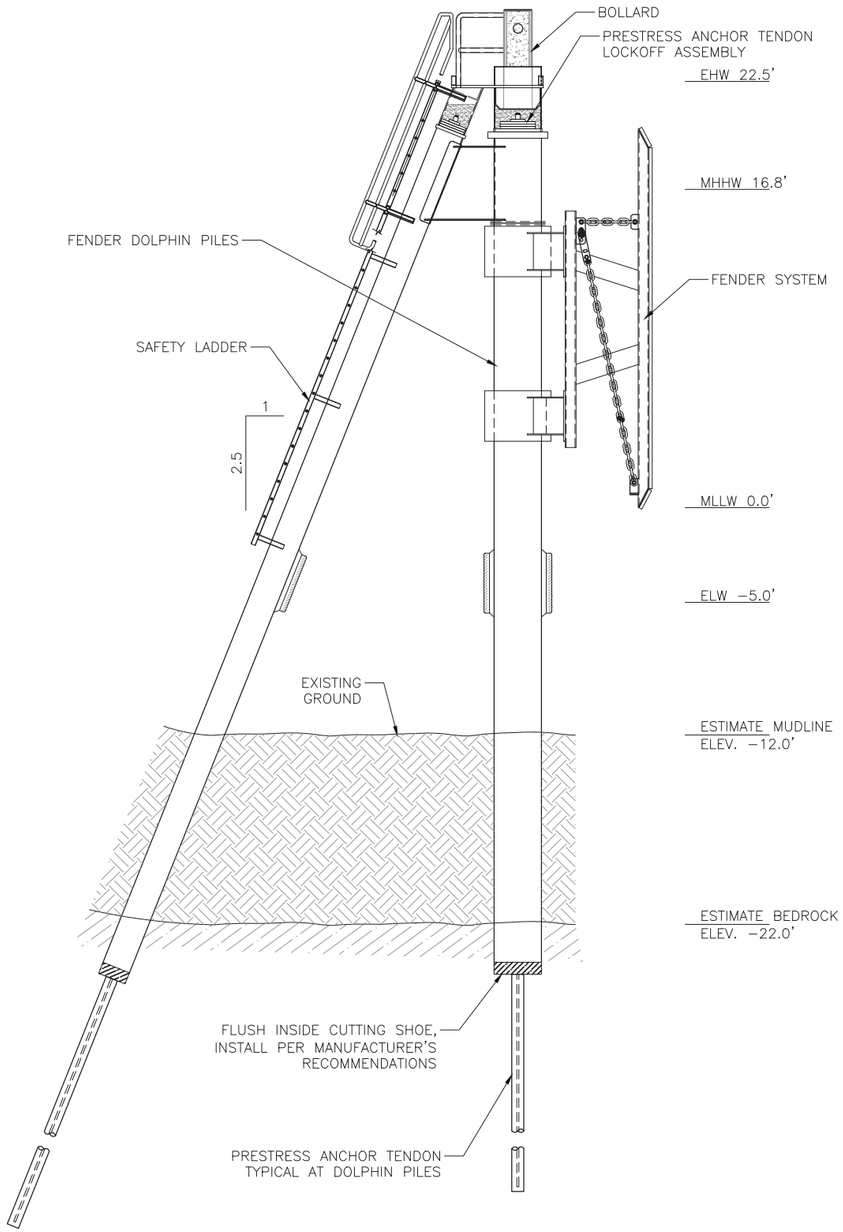

1 **3 PILE DOLPHIN ELEVATION**

Scale: 1/4" = 1'-0"

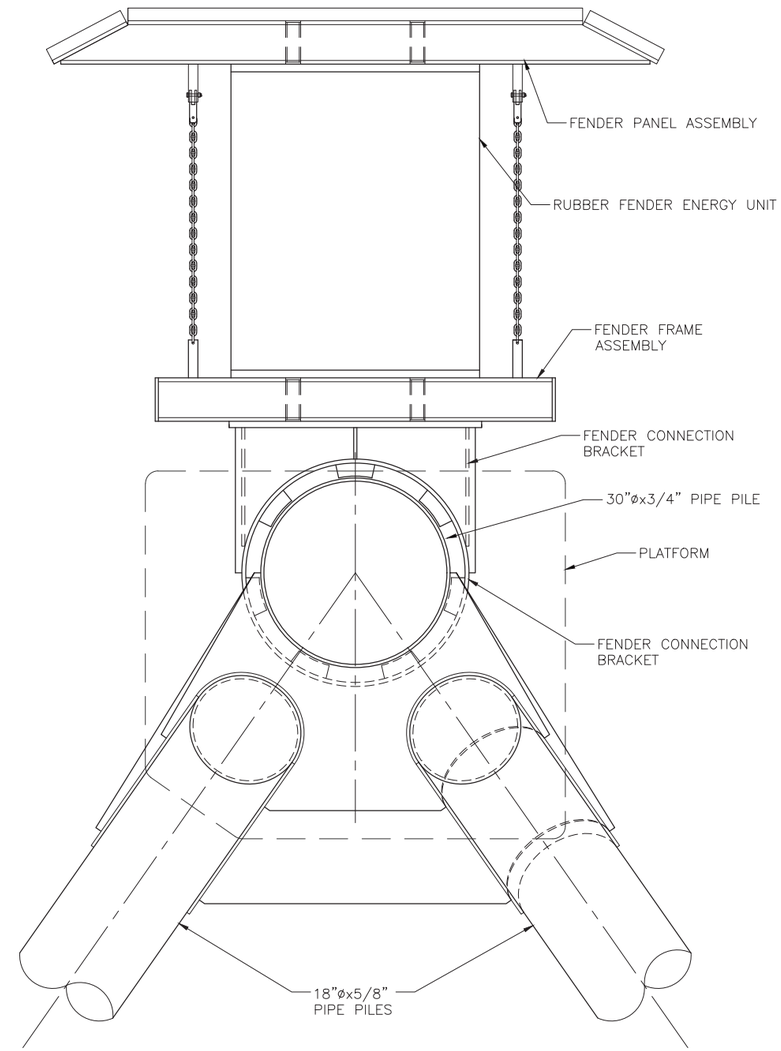

2 **3 PILE DOLPHIN PLAN**

Scale: 1" = 1'-0"

PROGRESS SET NOT FOR CONSTRUCTION

R&M CONSULTANTS, INC.
9101 Vanguard Drive
Anchorage, Alaska 99507
rmconsult.com• email@rmconsult.com
phone: 907.522.1707 • fax: 907.522.3403
CORPORATE AUTHORIZATION NUMBER AECC111

Haines Borough

LUTAK DOCK STUDY

No.	Description	Date

Drawn By: PMH/JVC
Checked By: JD/DA
Date: DEC 23, 2016
Phase: PRELIMINARY
Project No: 2443.01
SHEET TITLE: BARGE RAMP - 3 PILE DOLPHIN
SHEET NO: 14 OF 27

C1.8

Z:\project\2443.01 Hb Haines Lutak Dock Study\Civil\ACAD\2443.01 - C1.8 - 3 Pile Dolphin Plan & Elevation.dwg
Plotted 12/23/2016 9:39 AM by Jean Cumlat

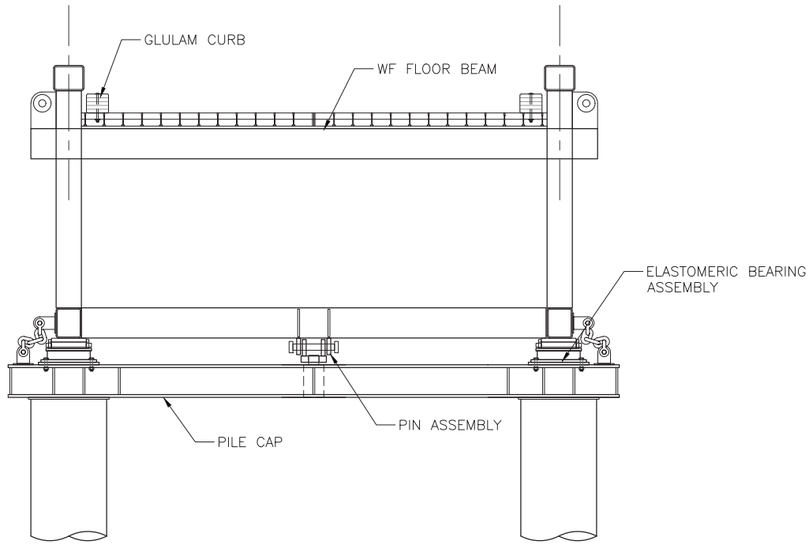

1 **BRIDGE SECTION AT APPROACH**
Scale: 1:30

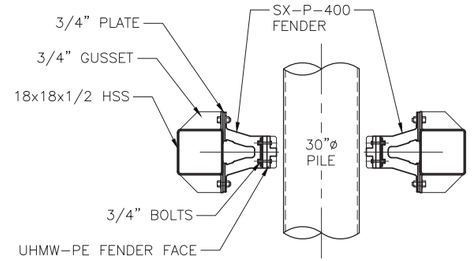

SECTION AT 30" PILE
Scale: 1:30

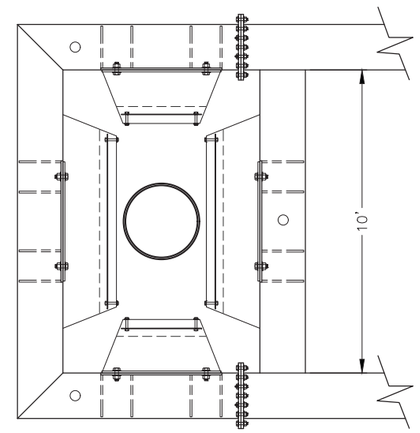

EXTERIOR PILE COLLAR
Scale: 1:30

2 **EXTERIOR PILE COLLAR DETAIL**
Scale: 1:30

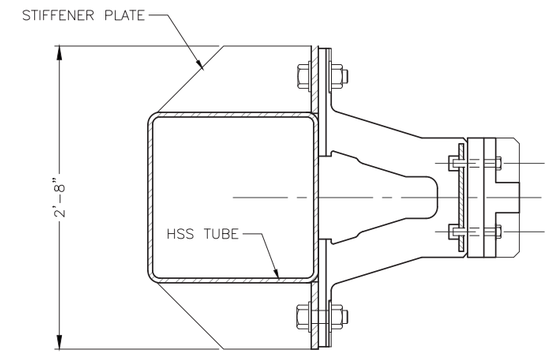

3 **CONNECTION AT SX-P FENDER**
Scale: 1:8

PROGRESS SET NOT FOR CONSTRUCTION

R&M CONSULTANTS, INC.
9101 Vanguard Drive
Anchorage, Alaska 99507
rmconsult.com• email@rmconsult.com
phone: 907.522.1707 • fax: 907.522.3403

CORPORATE AUTHORIZATION NUMBER AECC111

Haines Borough
LUTAK DOCK STUDY

No.	Description	Date

Drawn By: PMH/JVC
Checked By: JD/DA
Date: DEC 23, 2016
Phase: PRELIMINARY
Project No: 2443.01
SHEET TITLE: BARGE RAMP - DETAILS
SHEET NO: 15 OF 27
C1.9

Z:\project\2443.01 Hb Haines Lutak Dock Study\Civil\ACAD\2443.01 – C1.7 – Barge Ramp Details.dwg
Plotted 12/23/2016 9:40 AM by Jean Cumlat

CONCEPT COST ESTIMATE:

NO.	PAY ITEM DESCRIPTION	UNIT	QUANTITY	UNIT PRICE	AMOUNT
1	MOB AND DEMOB	LS	1	$3,000,000	$3,000,000
2	CONSTRUCTION SURVEY	LS	1	$180,000	$180,000
3	PROTECTED SPECIES OBSERVER	LS	1	$120,000	$120,000
4	EROSION AND POLLUTION CONTROL	LS	1	$31,250	$31,250
5	SILT CURTAIN - BOOM	LS	1	$120,000	$120,000
	SUB TOTAL MOB AND DEMOB				**$3,451,250**
6	DEMOLITION OF PILE CAPS AND MISC STRUCTURE	LF	770	$510	$392,700
7	DEMOLITION OF DOLPHINS AND EXISTING STRUCTURE	LS	1	$50,000	$50,000
8	DEMOLITION OF SHEET PILE WALLS	SF	158,714	$3.50	$555,499
9	SALVAGE EXISTING FENDERS	EA	11	$2,000	$22,000
10	SALVAGE EXISTING FENDER PILES	EA	22	$2,500	$55,000
11	EXCAVATION AND DISPOSAL OF EXISTING FILL	CY	137,259	$15	$2,058,885
12	DREDGING AND DISPOSAL	CY	34,369	$24	$824,856
	SUB TOTAL DEMOLITION				**$3,958,940**
13	FURNISH AND INSTALL SELECT MATERIAL TYPE A	CY	5,157	$20	$103,140
14	FURNISH AND INSTALL SUBBASE GRADING TYPE B	CY	1,428	$25	$35,700
15	FURNISH AND INSTALL LEVELING COURSE D-1	CY	333	$40	$13,320
16	FURNISH AND INSTALL CLASS I RIP RAP SLOPE PROTECTION	CY	6,302	$102	$642,804
17	FURNISH AND INSTALL CLASS IV RIP RAP SLOPE PROTECTION	CY	6,954	$109	$757,986
18	FURNISH 24" DIAMETER PIPE PILES	LF	40,425	$138	$5,578,650

NO.	PAY ITEM DESCRIPTION	UNIT	QUANTITY	UNIT PRICE	AMOUNT
19	INSTALL 24" DIAMETER PILING IN ROCK SOCKET	EA	385	$20,000	$7,700,000
20	FURNISH ABUTMENT NZ-19 SHEET PILING	SF	26,950	$36	$970,200
21	INSTALL ABUTMENT NZ-19 SHEET PILING, PER PAIR	EA	336	$2,500	$840,000
22	FURNISH AND INSTALL ABUTMENT TIE RODS AND WALER	EA	129	$2,000	$258,000
23	FURNISH AND INSTALL PLATFORM DOCK ABUTMENT PILE CAP AND GRATE	LF	770	$1,000	$770,000
24	FURNISH AND INSTALL DOCK PILE CAPS	CY	1,283	$2,000	$2,566,000
25	FURNISH AND INSTALL DECK PANELS	SF	71,225	$107	$7,621,075
26	FURNISH AND INSTALL FACE BEAM - BULLRAIL	CY	446	$2,000	$892,000
27	FURNISH AND INSTALL CLEATS	EA	8	$5,000	$40,000
28	FURNISH AND INSTALL BOLLARDS	EA	4	$10,000	$40,000
29	INSTALL SALVAGED FENDERS	EA	11	$6,000	$66,000
30	INSTALL SALVAGED FENDER PILES	EA	22	$2,500	$55,000
31	FURNISH AND INSTALL NEW FENDERS	EA	5	$130,000	$650,000
32	FURNISH 22" DIAMETER PIPE PILES	LF	960	$132	$126,720
33	INSTALL 22" DIAMETER PILING	EA	10	$4,000	$40,000
34	FURNISH AND INSTALL LIFE RINGS	EA	5	$1,200	$6,000
35	FURNISH AND INSTALL FIRE EXTINGUISHERS	EA	5	$1,200	$6,000
36	FURNISH AND INSTALL FIRE STANDPIPE	LF	1,000	$120	$120,000
37	FURNISH AND INSTALL 150# ANODES	EA	1,201	$1,200	$1,441,200
38	FURNISH 18" DIAMETER PIPE PILES	LF	320	$128	$40,960
39	INSTALL 18" DIAMETER PILING IN ROCK SOCKET	EA	6	$20,000	$120,000
40	FURNISH 30" DIAMETER PIPE PILES	LF	880	$258	$227,040

NO.	PAY ITEM DESCRIPTION	UNIT	QUANTITY	UNIT PRICE	AMOUNT
41	INSTALL 30" DIAMETER PILING IN ROCK SOCKET	EA	17	$25,000	$425,000
42	FURNISH AND INSTALL TENSION ANCHOR	EA	23	$35,000	$805,000
43	FURNISH AND INSTALL BARGE BERTH ABUTMENT PILE CAP AND GRATE	LS	1	$30,000	$30,000
44	FURNISH AND INSTALL BARGE TRANSFER BRIDGE	LS	1	$1,120,000	$1,120,000
45	FURNISH AND INSTALL 3 PILE DOLPHINS	EA	3	$140,000	$420,000
46	FURNISH AND INSTALL 4 PILE DOLPHINS	EA	2	$210,000	$420,000
47	ELECTRICAL AND LIGHTING	LS	1	$315,600	$315,600
	SUB TOTAL CONSTRUCTION				**$35,263,395**
	TOTAL CONSTRUCTION				**$42,673,585**
A	DESIGN UPLAND SURVEY	LS	1	$55,000	$55,000
B	DESIGN HYDROGRAPHIC SURVEY	LS	1	$20,000	$20,000
C	DESIGN GEOTECH PROGRAM	LS	1	$140,000	$140,000
D	DESIGN (10% OF CONSTRUCTION)	LS	1	$4,267,359	$4,267,359
E	PERMITTING CLEAN WATER ACT SECTION 10 AND 404	LS	1	$20,000	$20,000
F	PERMITTING NMFS IHA	LS	1	$80,000	$80,000
G	PERMITTING NEPA	LS	1	$100,000	$100,000
H	CONSTRUCTION ADMINISTRATION (6% OF CONSTRUCTION)	LS	1	$2,115,804	$2,115,804
	SUB TOTAL ENGINEERING AND ADMIN				**$6,798,163**
				TOTAL CONSTRUCTION & ENGINEERING COST:	$49,471,748
				25% CONTINGENCY:	$12,367,937
				TOTAL:	$61,840,000

ALTERNATIVE 2 - PILE SUPPORTED DOCK

PROGRESS SET NOT FOR CONSTRUCTION

R&M CONSULTANTS, INC.
9101 Vanguard Drive
Anchorage, Alaska 99507
rmconsult.com• email@rmconsult.com
phone: 907.522.1707 • fax: 907.522.3403

CORPORATE AUTHORIZATION NUMBER AECC111

Haines Borough
LUTAK DOCK STUDY

No.	Description	Date

Drawn By: PMH/JVC
Checked By: JD/DA
Date: DEC 23, 2016
Phase: PRELIMINARY
Project No: 2443.01
SHEET TITLE: ALTERNATIVE 2 - PILE SUPPORTED DOCK
SHEET NO: 16 OF 27
C2.0

Plotted 12/23/2016 9:40 AM by Jean Cumlat
Z:\project\2443.01 Hb Haines Lutak Dock Study\Civil\ACAD\2443.01 – C2.0 Alternative 2 Description.dwg

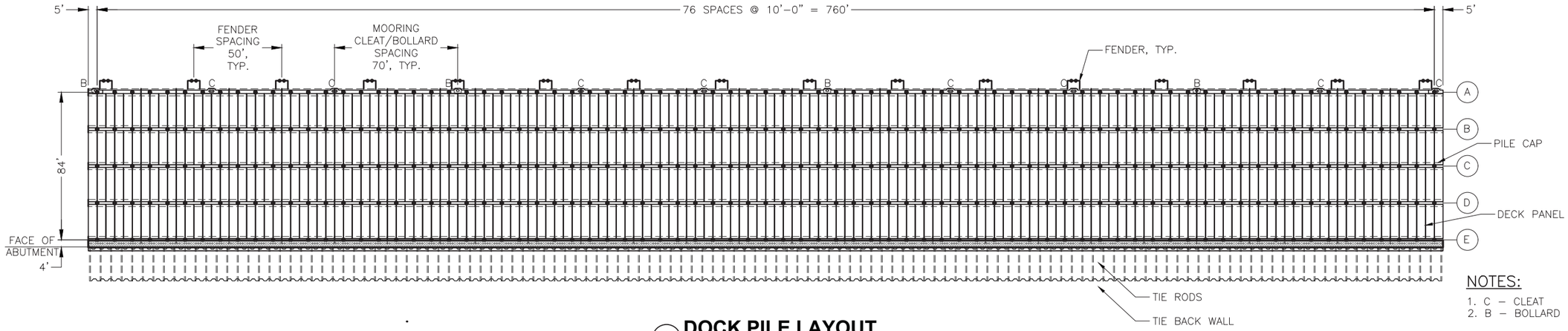

NOTES:

1. C – CLEAT
2. B – BOLLARD

1 DOCK PILE LAYOUT

Scale: 1/32" = 1'-0"

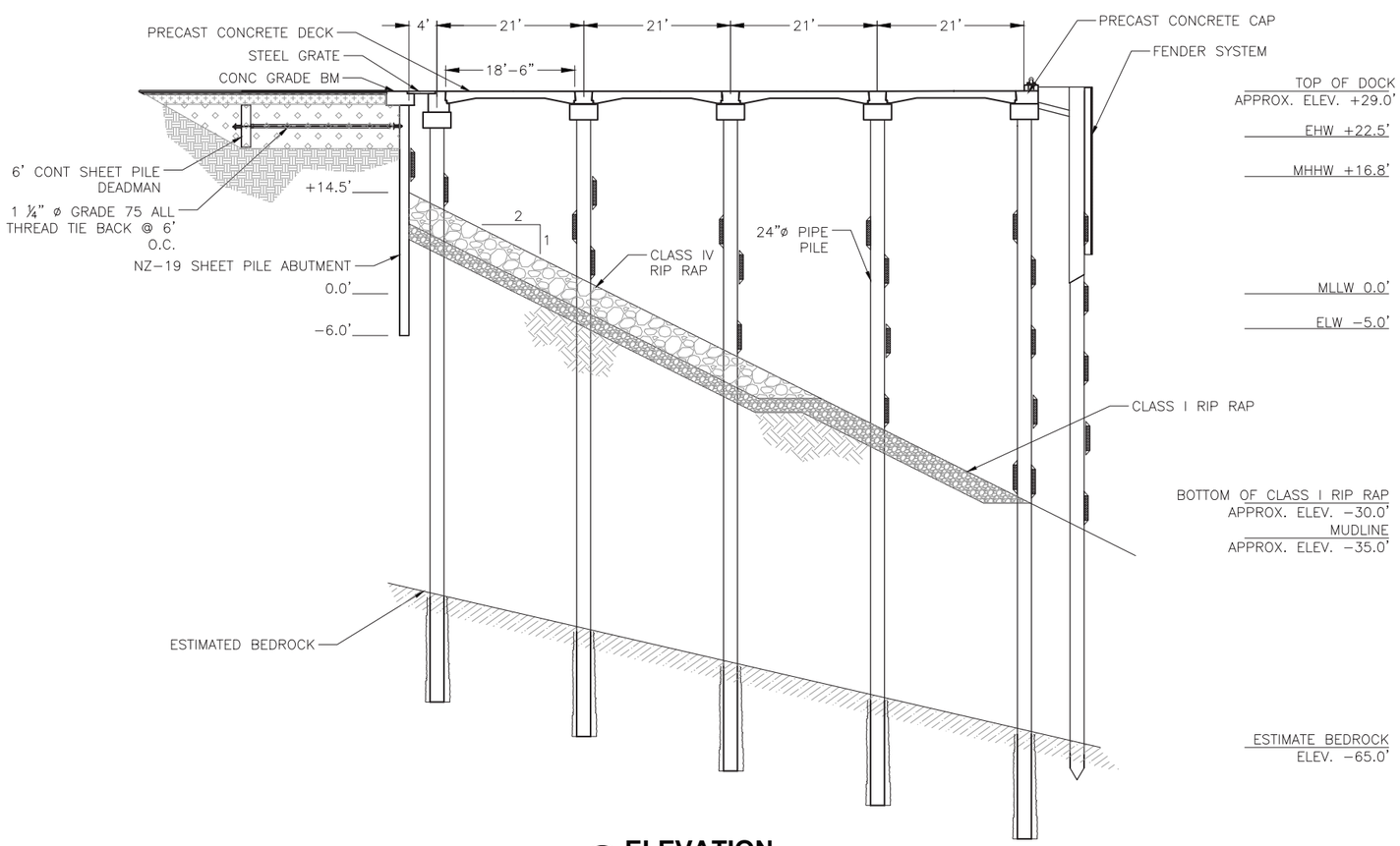

2 ELEVATION

Scale: 3/32" = 1'-0"

PROGRESS SET NOT FOR CONSTRUCTION

R&M CONSULTANTS, INC.
9101 Vanguard Drive
Anchorage, Alaska 99507
rmconsult.com• email@rmconsult.com
phone: 907.522.1707 • fax: 907.522.3403
CORPORATE AUTHORIZATION NUMBER AECC111

Haines Borough
LUTAK DOCK STUDY

No.	Description	Date

Drawn By: PMH/JVC
Checked By: JD/DA
Date: DEC 23, 2016
Phase: PRELIMINARY
Project No: 2443.01
SHEET TITLE: ALTERNATIVE 2 - PILE DOCK PLAN AND ELEVATION
SHEET NO: 17 OF 27
C2.1

Z:\project\2443.01 Hb Haines Lutak Dock Study\Civil\ACAD\2443.01 – C2.1 Alternative 2 Pile Dock Plan & Elevation.dwg
Plotted 12/23/2016 9:41 AM by Jean Cumlat

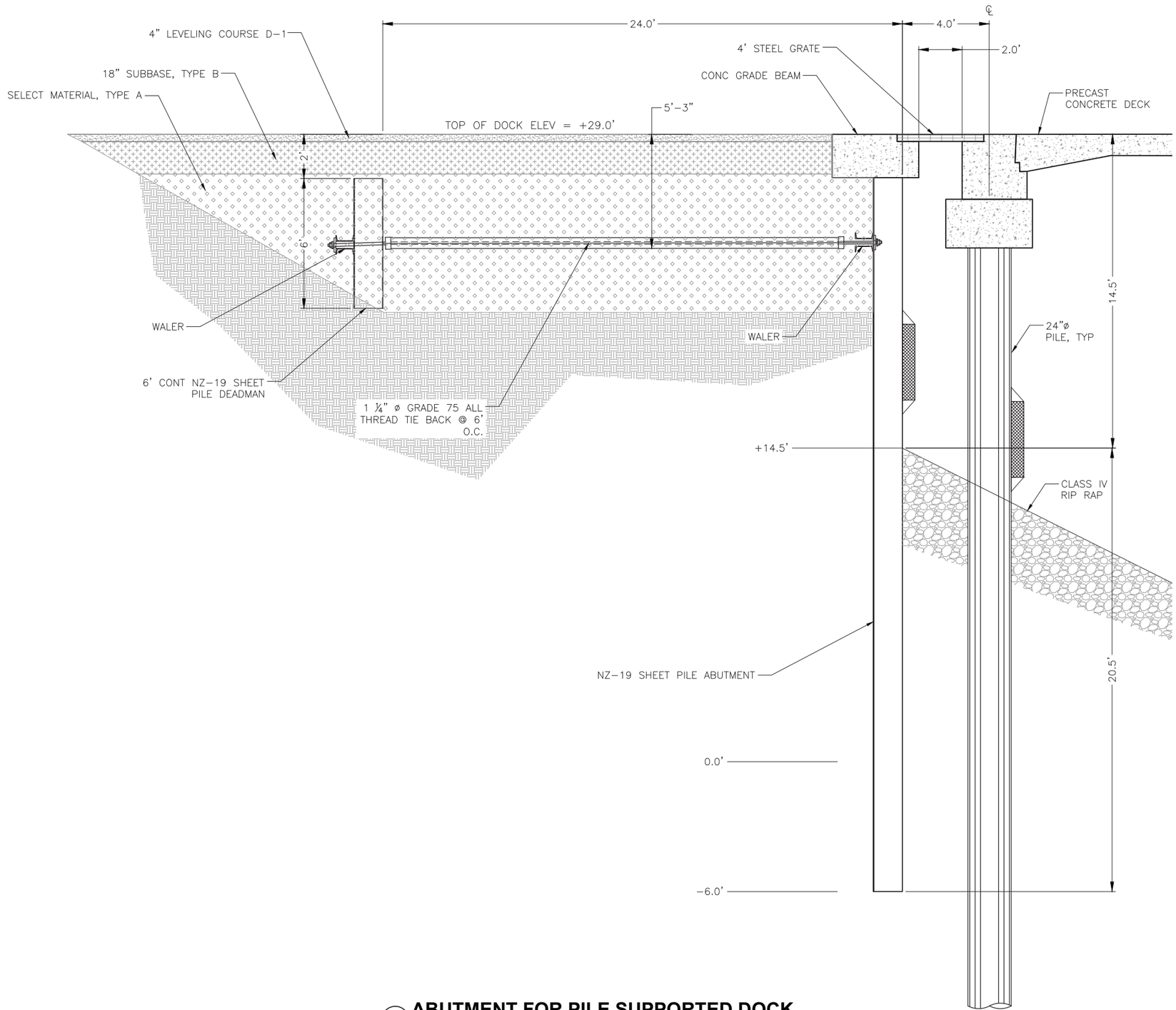

1 **ABUTMENT FOR PILE SUPPORTED DOCK**

Scale: 1" = 30'

PROGRESS SET NOT FOR CONSTRUCTION

R&M CONSULTANTS, INC.
9101 Vanguard Drive
Anchorage, Alaska 99507
rmconsult.com• email@rmconsult.com
phone: 907.522.1707 • fax: 907.522.3403

CORPORATE AUTHORIZATION NUMBER AECC111

Haines Borough

LUTAK DOCK STUDY

No.	Description	Date

Drawn By: PMH/JVC
Checked By: JD/DA
Date: DEC 23, 2016
Phase: PRELIMINARY
Project No: 2443.01
SHEET TITLE: ALTERNATIVE 2 - ABUTMENT SECTION

SHEET NO: 18 OF 27

C2.2

Z:\project\2443.01 Hb Haines Lutak Dock Study\Civil\ACAD\2443.01 – C2.1 Alternative 2 Pile Dock Plan & Elevation.dwg

Plotted 12/23/2016 9:41 AM by Jean Cumlat

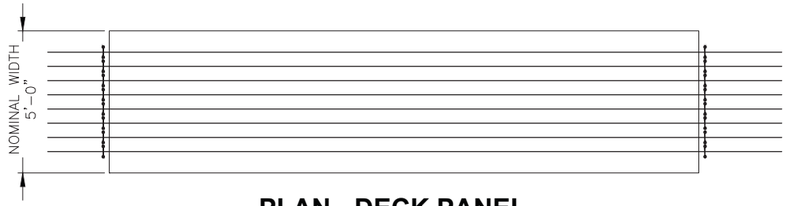

PLAN - DECK PANEL

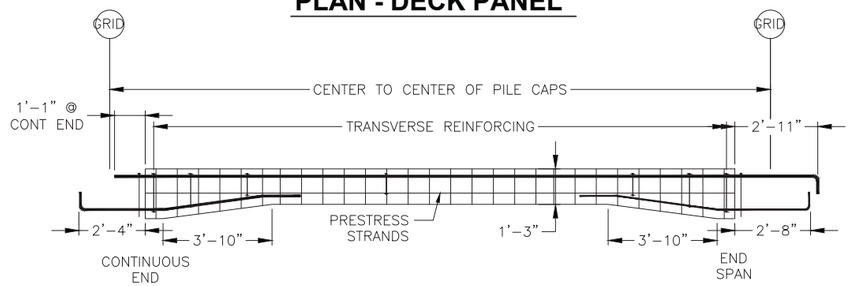

LONGITUDINAL SECTION - DECK PANEL

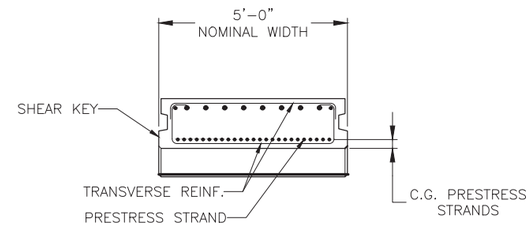

TRANSVERSE SECTION

1 HAUNCHED DECK PANEL DIMENSIONS & REINFORCING

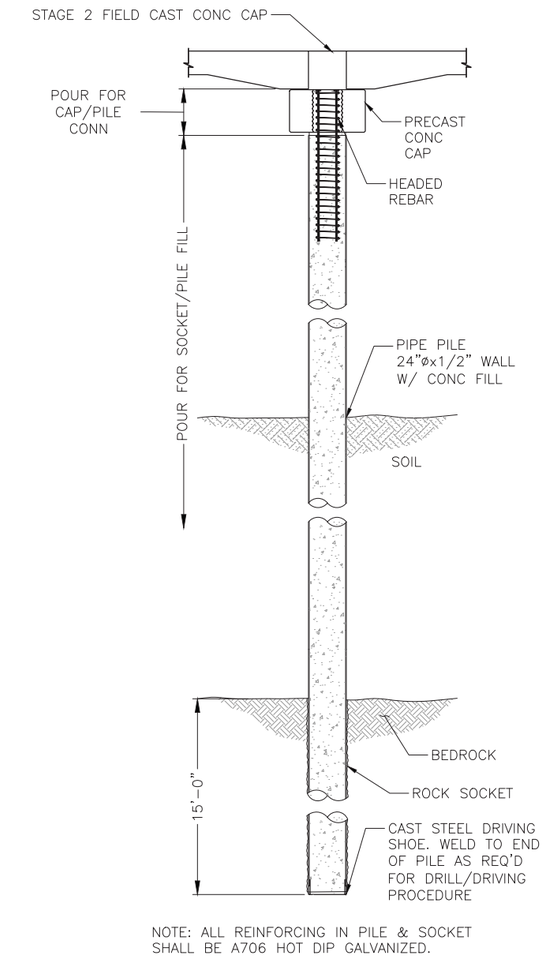

NOTE: ALL REINFORCING IN PILE & SOCKET SHALL BE A706 HOT DIP GALVANIZED.

2 TYPICAL PILE DETAIL

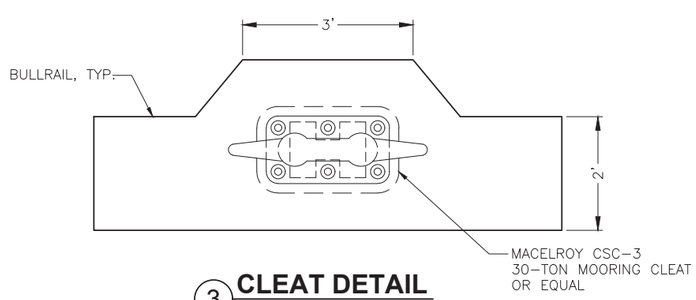

3 CLEAT DETAIL

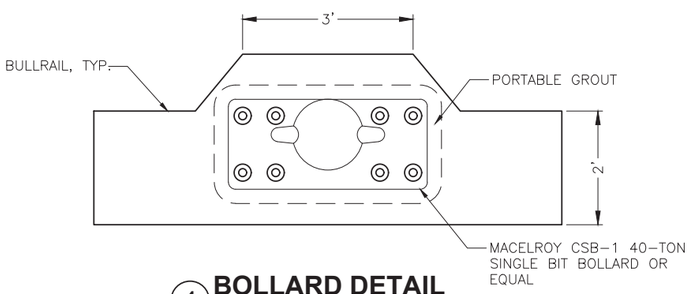

4 BOLLARD DETAIL

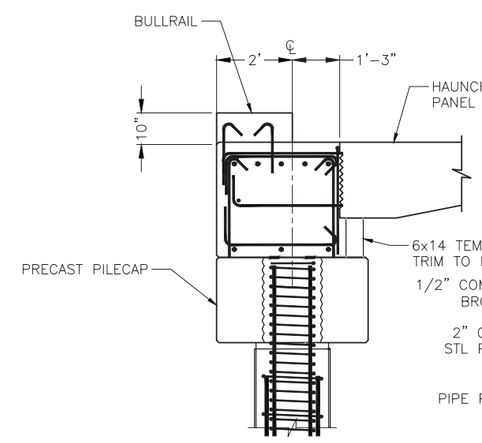

5 END PILE CAP SECTION

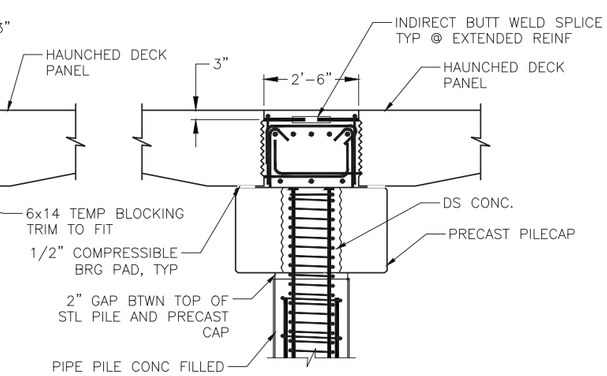

6 PILE CAP SECTION

PROGRESS SET
NOT FOR
CONSTRUCTION

R&M CONSULTANTS, INC.
9101 Vanguard Drive
Anchorage, Alaska 99507
rmconsult.com• email@rmconsult.com
phone: 907.522.1707 • fax: 907.522.3403
CORPORATE AUTHORIZATION NUMBER AECC111

Haines Borough
LUTAK DOCK STUDY

No.	Description	Date

Drawn By: PMH/JVC
Checked By: JD/DA
Date: DEC 23, 2016
Phase: PRELIMINARY
Project No: 2443.01
SHEET TITLE: ALTERNATIVE 2 - HAUNCHED DECK PANEL AND PILE CAP DETAILS
SHEET NO: 19 OF 27
C2.3

Z:\project\2443.01 Hb Haines Lutak Dock Study\Civil\ACAD\2443.01 – C2.3 Haunched Panel Decks & Pile Caps.dwg
Plotted 12/23/2016 9:41 AM by Jean Cumlat

CONCEPT COST ESTIMATE:

NO.	PAY ITEM DESCRIPTION	UNIT	QUANTITY	UNIT PRICE	AMOUNT
1	MOB AND DEMOB	LS	1	$2,500,000	$2,500,000
2	CONSTRUCTION SURVEY	LS	1	$150,000	$150,000
3	PROTECTED SPECIES OBSERVER	LS	1	$100,000	$100,000
4	EROSION AND POLLUTION CONTROL	LS	1	$25,000	$25,000
5	SILT CURTAIN - BOOM	LS	1	$100,000	$100,000
	SUB TOTAL MOB AND DEMOB				**$2,875,000**
6	DEMOLITION OF PILE CAPS AND MISC STRUCTURE	LF	770	$510	$392,700
7	DEMOLITION OF SHEET PILE WALLS	SF	158,714	$3.50	$555,499
8	DEMOLITION OF EXISTING FENDERS	EA	11	$2,000	$22,000
9	DEMOLITION OF EXISTING FENDER PILES	EA	22	$2,500	$55,000
10	EXCAVATION AND DISPOSAL OF EXISTING FILL	CY	137,259	$15	$2,058,885
11	DREDGING AND DISPOSAL	CY	32,369	$24	$776,856
	SUB TOTAL DEMOLITION				**$3,860,940**
12	FURNISH AND INSTALL SELECT MATERIAL TYPE A	CY	13,423	$20	$268,460
13	FURNISH AND INSTALL SUBBASE GRADING TYPE B	CY	880	$25	$22,000
14	FURNISH AND INSTALL LEVELING COURSE D-1	CY	178	$40	$7,120
15	FURNISH AND INSTALL CLASS I RIP RAP SLOPE PROTECTION	CY	8,864	$102	$904,128
16	FURNISH AND INSTALL CLASS IV RIP RAP SLOPE PROTECTION	CY	11,223	$109	$1,223,307
17	FURNISH 30" DIAMETER PIPE PILES	LF	3,740	$258	$964,920
18	INSTALL 30" DIAMETER PILING IN ROCK SOCKET	EA	38	$25,000	$950,000
19	FURNISH AND INSTALL TENSION ANCHOR	EA	36	$35,000	$1,260,000
20	FURNISH AND INSTALL 4 PILE DOLPHINS	EA	8	$210,000	$1,680,000
21	FURNISH 16" DIAMETER PIPE PILES	LF	1,670	$91	$151,970

NO.	PAY ITEM DESCRIPTION	UNIT	QUANTITY	UNIT PRICE	AMOUNT
22	INSTALL 16" DIAMETER PILING IN ROCK SOCKET	EA	18	$3,900	$70,200
23	FURNISH AND INSTALL CATWALKS	LF	800	$1,250	$1,000,000
24	FURNISH AND INSTALL ABUTMENT PILE CAP	LS	1	$30,000	$30,000
25	FURNISH AND INSTALL BARGE TRANSFER BRIDGE	LS	1	$1,120,000	$1,120,000
26	FURNISH AND INSTALL LIFE RINGS	EA	5	$1,200	$6,000
27	FURNISH AND INSTALL FIRE EXTINGUISHERS	EA	5	$1,200	$6,000
28	FURNISH AND INSTALL FIRE STANDPIPE	LF	1,000	$120	$120,000
29	FURNISH AND INSTALL 150# ANODES	EA	260	$1,200	$312,000
30	ELECTRICAL, MECHANICAL, AND LIGHTING	LS	1	$315,600	$315,600
	SUB TOTAL CONSTRUCTION				**$10,411,705**
	TOTAL CONSTRUCTION				**$17,147,645**
A	DESIGN UPLAND SURVEY	LS	1	$55,000	$55,000
B	DESIGN HYDROGRAPHIC SURVEY	LS	1	$20,000	$20,000
C	DESIGN GEOTECH PROGRAM	LS	1	$140,000	$140,000
D	DESIGN (10% OF CONSTRUCTION)	LS	1	$1,714,765	$1,714,765
E	PERMITTING CLEAN WATER ACT SECTION 10 AND 404	LS	1	$20,000	$20,000
F	PERMITTING NMFS IHA	LS	1	$80,000	$80,000
G	PERMITTING NEPA	LS	1	$100,000	$100,000
H	CONSTRUCTION ADMINISTRATION (6% OF CONSTRUCTION)	LS	1	$1,028,859	$1,028,859
	SUB TOTAL ENGINEERING AND ADMIN				**$3,158,624**
				TOTAL CONSTRUCTION & ENGINEERING COST:	$20,306,269
				25% CONTINGENCY:	$5,076,567
				TOTAL:	$25,383,000

ALTERNATIVE 3A - DOLPHIN FACE

PROGRESS SET NOT FOR CONSTRUCTION

R&M CONSULTANTS, INC.
9101 Vanguard Drive
Anchorage, Alaska 99507
rmconsult.com• email@rmconsult.com
phone: 907.522.1707 • fax: 907.522.3403
CORPORATE AUTHORIZATION NUMBER AECC111

Haines Borough
LUTAK DOCK STUDY

No.	Description	Date

Drawn By: PMH/JVC
Checked By: JD/DA
Date: DEC 23, 2016
Phase: PRELIMINARY
Project No: 2443.01
SHEET TITLE: ALTERNATIVE 3A - DOLPHIN FACE
SHEET NO: 20 OF 27
C3.0

Plotted 12/23/2016 9:41 AM by Jean Cumlat Z:\project\2443.01 Hb Haines Lutak Dock Study\Civil\ACAD\2443.01 – C3.0 Alternative 3 Description.dwg

CONCEPT COST ESTIMATE:

NO.	PAY ITEM DESCRIPTION	UNIT	QUANTITY	UNIT PRICE	AMOUNT
1	MOB AND DEMOB	LS	1	$2,500,000	$2,500,000
2	CONSTRUCTION SURVEY	LS	1	$150,000	$150,000
3	PROTECTED SPECIES OBSERVER	LS	1	$100,000	$100,000
4	EROSION AND POLLUTION CONTROL	LS	1	$25,000	$25,000
5	SILT CURTAIN - BOOM	LS	1	$100,000	$100,000
	SUB TOTAL MOB AND DEMOB				**$2,875,000**
6	DEMOLITION OF PILE CAPS AND MISC STRUCTURE	LF	770	$510	$392,700
7	DEMOLITION OF SHEET PILE WALLS	SF	158,714	$3.50	$555,498
8	DEMOLITION OF EXISTING FENDERS	EA	11	$2,000	$22,000
9	DEMOLITION OF EXISTING FENDER PILES	EA	22	$2,500	$55,000
10	EXCAVATION AND DISPOSAL OF EXISTING FILL	CY	137,259	$15	$2,058,885
11	DREDGING AND DISPOSAL	CY	32,369	$24	$776,844
	SUB TOTAL DEMOLITION				**$3,860,927**
12	FURNISH AND INSTALL SELECT MATERIAL TYPE A	CY	13,423	$20	$268,460
13	FURNISH AND INSTALL SUBBASE GRADING TYPE B	CY	880	$25	$22,000
14	FURNISH AND INSTALL LEVELING COURSE D-1	CY	178	$40	$7,120
15	FURNISH AND INSTALL CLASS I RIP RAP SLOPE PROTECTION	CY	8,864	$102	$904,128
16	FURNISH AND INSTALL CLASS IV RIP RAP SLOPE PROTECTION	CY	11,223	$109	$1,223,307
17	FURNISH 30" DIAMETER PIPE PILES	LF	2,140	$258	$552,120
18	INSTALL 30" DIAMETER PILING IN ROCK SOCKET	EA	22	$25,000	$550,000
19	FURNISH AND INSTALL TENSION ANCHOR	EA	20	$35,000	$700,000
20	FURNISH AND INSTALL 4 PILE DOLPHINS	EA	4	$210,000	$840,000
21	FURNISH 16" DIAMETER PIPE PILES	LF	870	$91	$79,170

NO.	PAY ITEM DESCRIPTION	UNIT	QUANTITY	UNIT PRICE	AMOUNT
22	INSTALL 16" DIAMETER PILING IN ROCK SOCKET	EA	10	$3,900	$39,000
23	FURNISH AND INSTALL CATWALKS	LF	440	$1,250	$550,000
24	FURNISH AND INSTALL ABUTMENT PILE CAP	LS	1	$30,000	$30,000
25	FURNISH AND INSTALL BARGE TRANSFER BRIDGE	LS	1	$1,120,000	$1,120,000
26	FURNISH AND INSTALL LIFE RINGS	EA	4	$1,200	$4,800
27	FURNISH AND INSTALL FIRE EXTINGUISHERS	EA	4	$1,200	$4,800
28	FURNISH AND INSTALL FIRE STANDPIPE	LF	1,000	$120	$120,000
29	FURNISH AND INSTALL 150# ANODES	EA	144	$1,200	$172,800
30	ELECTRICAL, MECHANICAL, AND LIGHTING	LS	1	$315,600	$315,600
	SUB TOTAL CONSTRUCTION				**$7,503,305**
	TOTAL CONSTRUCTION				**$14,239,232**
A	DESIGN UPLAND SURVEY	LS	1	$55,000	$55,000
B	DESIGN HYDROGRAPHIC SURVEY	LS	1	$20,000	$20,000
C	DESIGN GEOTECH PROGRAM	LS	1	$140,000	$140,000
D	DESIGN (10% OF CONSTRUCTION)	LS	1	$1,423,923	$1,423,923
E	PERMITTING CLEAN WATER ACT SECTION 10 AND 404	LS	1	$20,000	$20,000
F	PERMITTING NMFS IHA	LS	1	$80,000	$80,000
G	PERMITTING NEPA	LS	1	$100,000	$100,000
H	CONSTRUCTION ADMINISTRATION (6% OF CONSTRUCTION)	LS	1	$854,354	$854,354
	SUB TOTAL ENGINEERING AND ADMIN				**$2,693,277**
				TOTAL CONSTRUCTION & ENGINEERING COST:	$16,932,509
				25% CONTINGENCY:	$4,233,127
				TOTAL:	$21,166,000

ALTERNATIVE 3B - DOLPHIN FACE

PROGRESS SET NOT FOR CONSTRUCTION

R&M CONSULTANTS, INC.
9101 Vanguard Drive
Anchorage, Alaska 99507
rmconsult.com• email@rmconsult.com
phone: 907.522.1707 • fax: 907.522.3403
CORPORATE AUTHORIZATION NUMBER AECC111

Haines Borough
LUTAK DOCK STUDY

No.	Description	Date

Drawn By: PMH/JVC
Checked By: JD/DA
Date: DEC 23, 2016
Phase: PRELIMINARY
Project No: 2443.01
SHEET TITLE: ALTERNATIVE 3B - DOLPHIN FACE
SHEET NO: 21 OF 27
C3.1

Plotted 12/23/2016 9:41 AM by Jean Cumlat Z:\project\2443.01 Hb Haines Lutak Dock Study\Civil\ACAD\2443.01 – C3.0 Alternative 3 Description.dwg

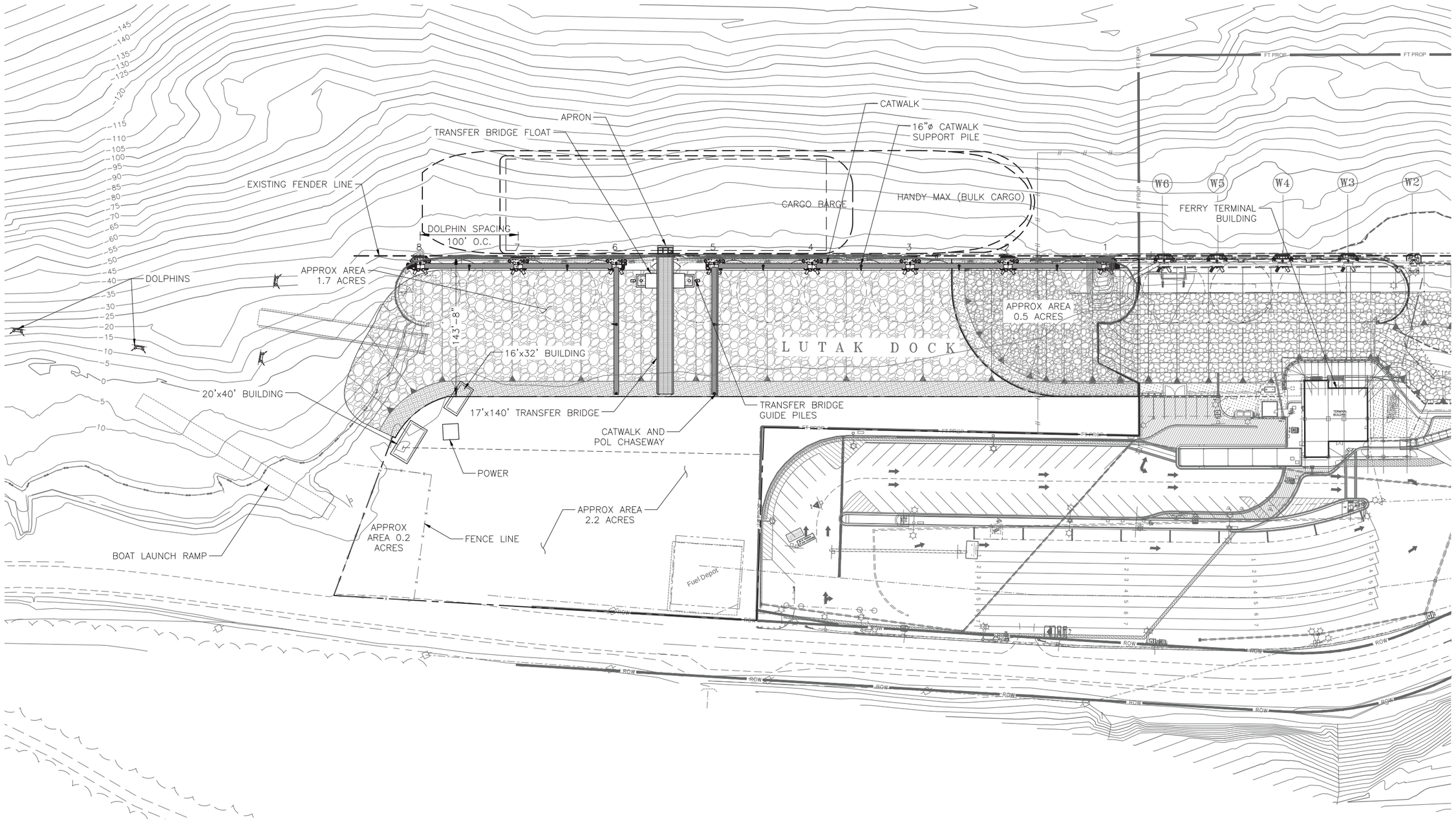

1 **SITE PLAN**
Scale: 1" = 50'

0 50 100
FEET

PROGRESS SET NOT FOR CONSTRUCTION

R&M CONSULTANTS, INC.
9101 Vanguard Drive
Anchorage, Alaska 99507
rmconsult.com• email@rmconsult.com
phone: 907.522.1707 • fax: 907.522.3403

CORPORATE AUTHORIZATION NUMBER AECC111

Haines Borough
LUTAK DOCK STUDY

No.	Description	Date

Drawn By: PMH/JVC
Checked By: JD/DA
Date: DEC 23, 2016
Phase: PRELIMINARY
Project No: 2443.01
SHEET TITLE: ALTERNATIVE 3A PLAN
SHEET NO: 22 OF 27
C3.2

Z:\project\2443.01 Hb Haines Lutak Dock Study\Civil\ACAD\2443.01 - C3.2 Alternative 3A Plan.dwg
Plotted 12/23/2016 9:42 AM by Jean Cumlat

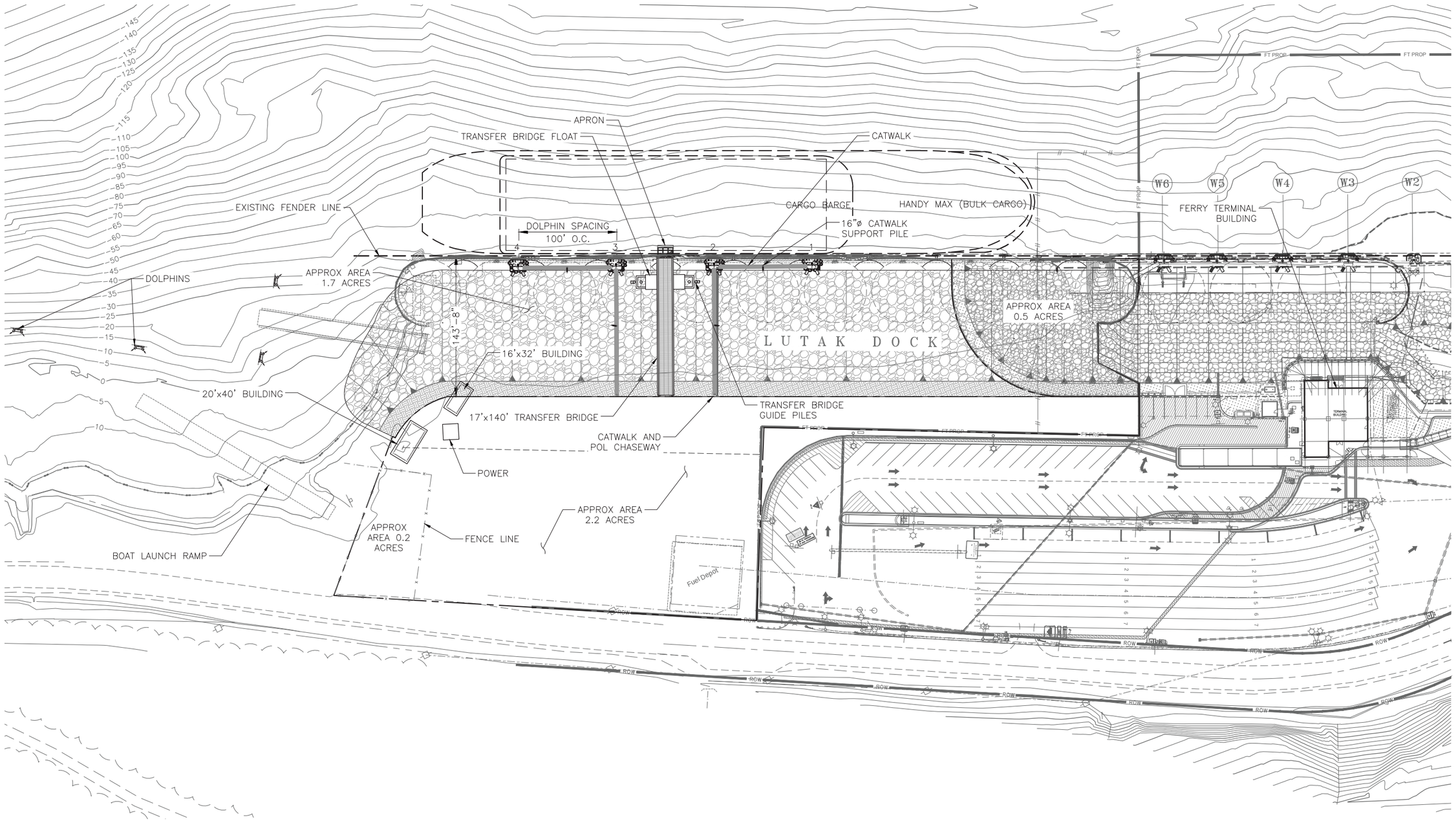

1 **SITE PLAN**
Scale: 1" = 50'

0 50 100
FEET

PROGRESS SET
NOT FOR
CONSTRUCTION

R&M CONSULTANTS, INC.
9101 Vanguard Drive
Anchorage, Alaska 99507
rmconsult.com• email@rmconsult.com
phone: 907.522.1707 • fax: 907.522.3403

CORPORATE AUTHORIZATION NUMBER AECC111

Haines Borough

LUTAK DOCK STUDY

No.	Description	Date

Drawn By: PMH/JVC
Checked By: JD/DA
Date: DEC 23, 2016
Phase: PRELIMINARY
Project No: 2443.01
SHEET TITLE: ALTERNATIVE 3B -PLAN

SHEET NO:
23 OF 27
C3.3

Z:\project\2443.01 Hb Haines Lutak Dock Study\Civil\ACAD\2443.01 - C3.3 Alternative 3B Plan.dwg

Plotted 12/23/2016 9:43 AM by Jean Cumlat

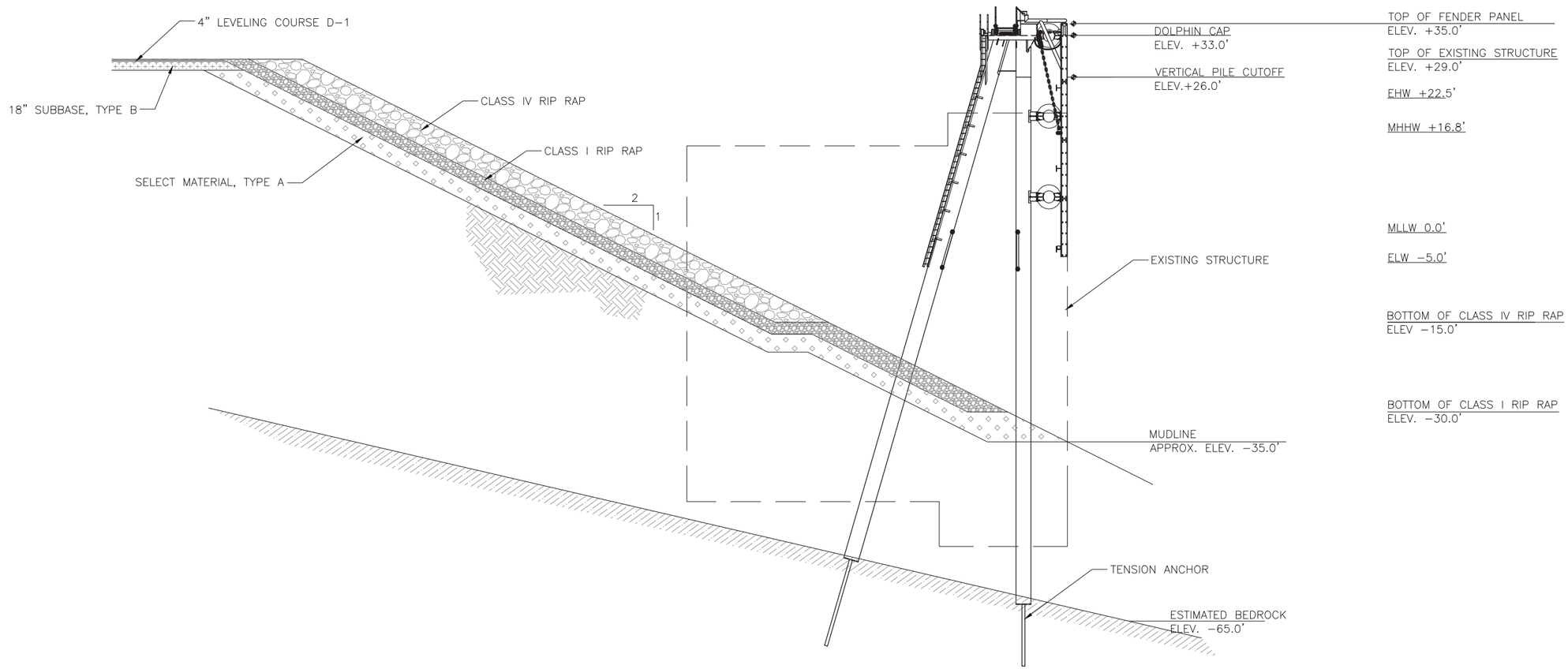

1 **ELEVATION**
Scale: 1" = 10'

0 10 20
FEET

PROGRESS SET NOT FOR CONSTRUCTION

R&M CONSULTANTS, INC.
9101 Vanguard Drive
Anchorage, Alaska 99507
rmconsult.com• email@rmconsult.com
phone: 907.522.1707 • fax: 907.522.3403

CORPORATE AUTHORIZATION NUMBER AECC111

Haines Borough
LUTAK DOCK STUDY

No.	Description	Date

Drawn By: PMH/JVC
Checked By: JD/DA
Date: DEC 23, 2016
Phase: PRELIMINARY
Project No: 2443.01
SHEET TITLE: ALTERNATIVE 3 - ELEVATION
SHEET NO: 24 OF 27
C3.4

Z:\project\2443.01 Hb Haines Lutak Dock Study\Civil\ACAD\2443.01 - C3.4 Alternate 3 Elevation.dwg
Plotted 12/23/2016 9:44 AM by Jean Cumlat

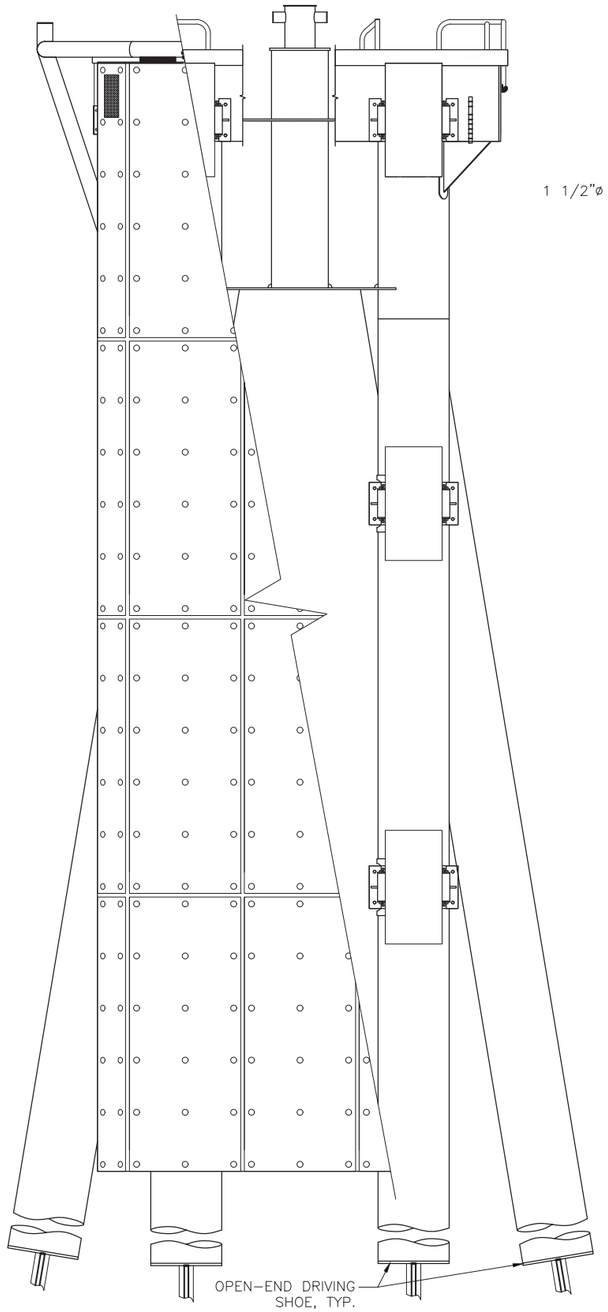

1 **FRONT ELEVATION**
Scale: 3/8" = 1'-0"

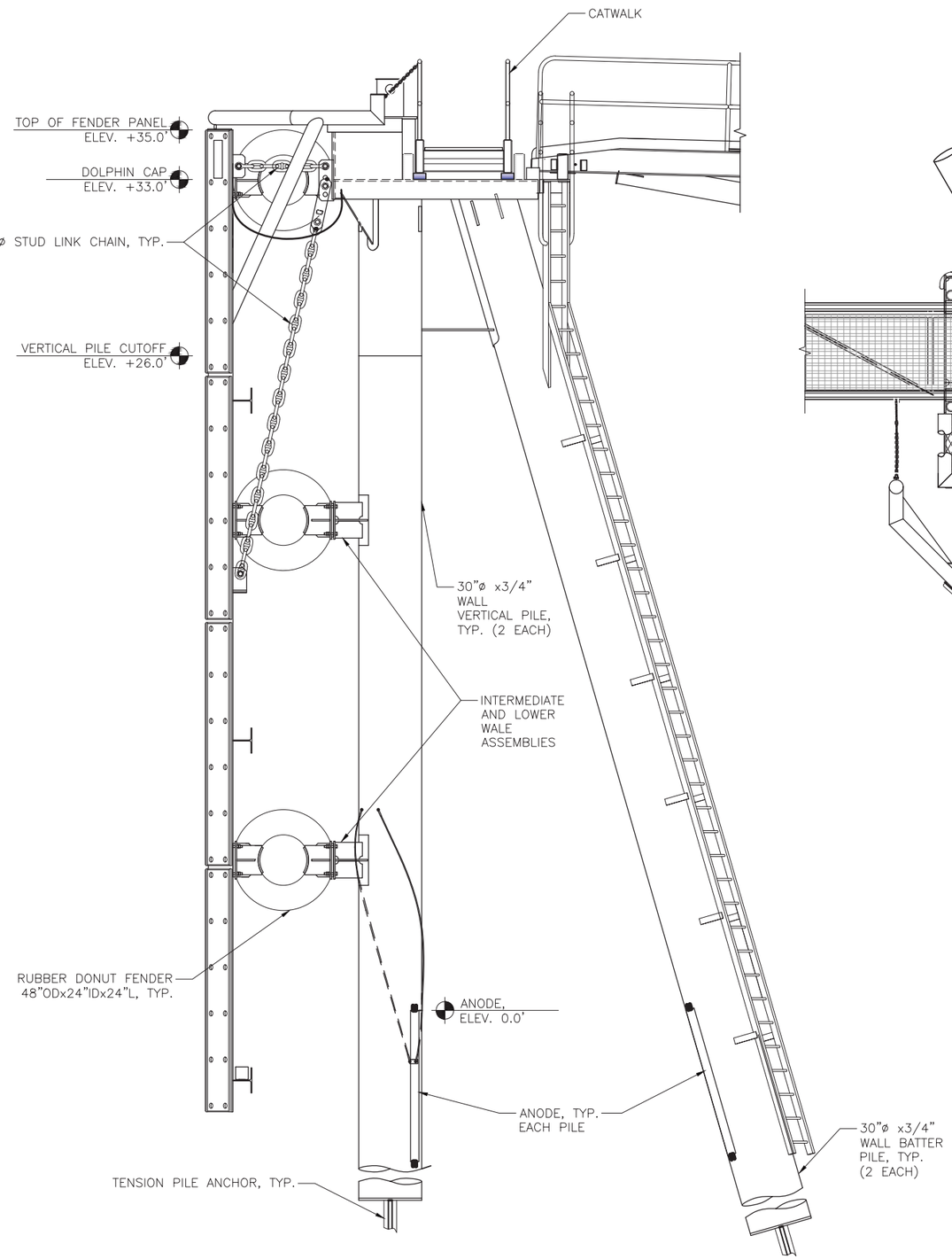

2 **SIDE ELEVATION**
Scale: 3/8" = 1'-0"

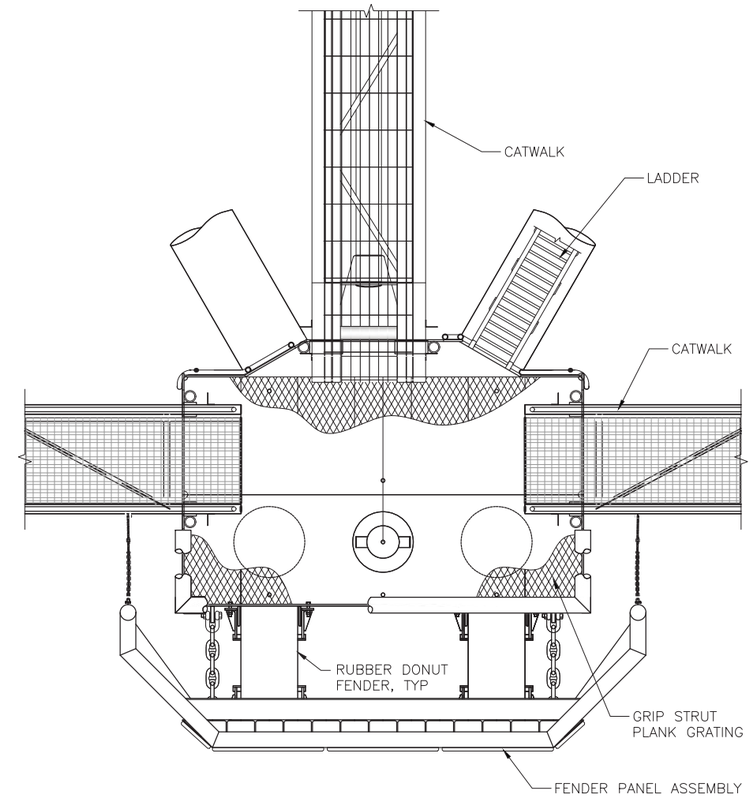

3 **TOP PLAN VIEW**
Scale: 3/8" = 1'-0"

PROGRESS SET NOT FOR CONSTRUCTION

R&M CONSULTANTS, INC.
9101 Vanguard Drive
Anchorage, Alaska 99507
rmconsult.com• email@rmconsult.com
phone: 907.522.1707 • fax: 907.522.3403

CORPORATE AUTHORIZATION NUMBER AECC111

Haines Borough
LUTAK DOCK STUDY

No.	Description	Date

Drawn By: PMH/JVC
Checked By: JD/DA
Date: DEC 23, 2016
Phase: PRELIMINARY
Project No: 2443.01
SHEET TITLE: ALTERNATIVE 3 - 4 PILE DOLPHIN DETAILS
SHEET NO: 25 OF 27
C3.5

Z:\project\2443.01 Hb Haines Lutak Dock Study\Civil\ACAD\2443.01 – C3.5 – 4 Pile Dolphin Details.dwg
Plotted 12/23/2016 9:44 AM by Jean Cumlat

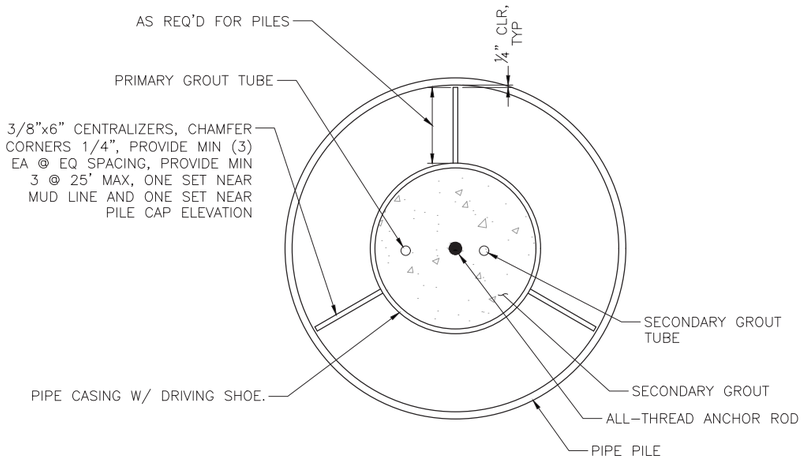

1 FREE STRESS ANCHOR SECTION

Scale: 1-1/2" = 1'-0"

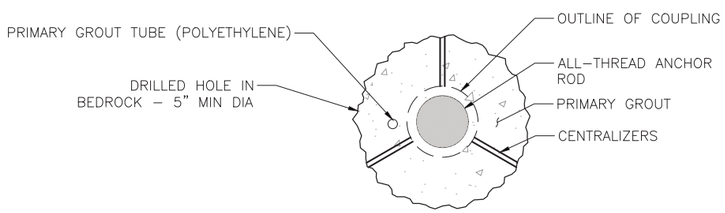

2 BONDED ROCK ANCHOR SECTION

Scale: 1-1/2" = 1'-0"

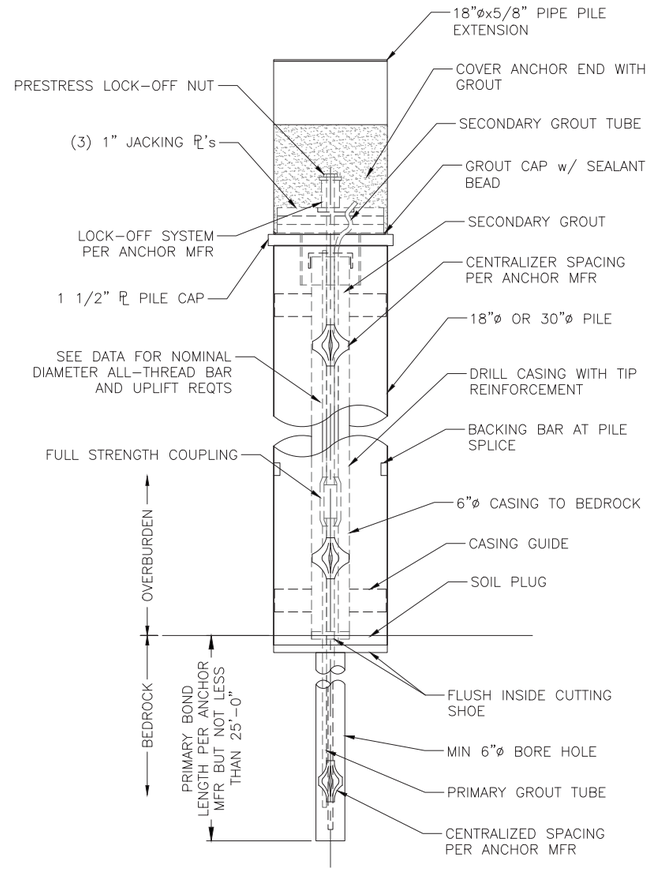

3 TENSION PILE ANCHOR SECTION

Scale: NTS

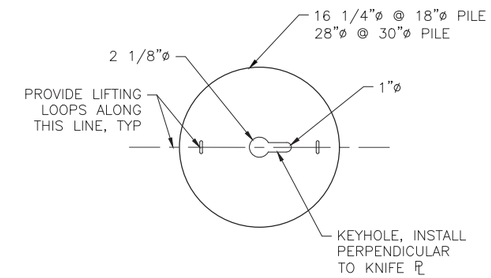

4 TOP JACKING PLATE

Scale: NTS

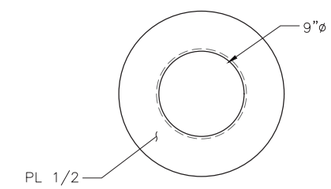

PLAN

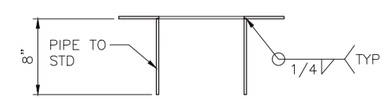

GROUTING CAP

5 GROUTING CAP

Scale: NTS

ROCK ANCHOR NOTES:

GENERAL:

1. ROCK ANCHOR DESIGN AND DETAILS ARE BASED ON "RECOMMENDATIONS FOR PRESTRESSED ROCK AND SOILS ANCHORS PTI DC35.1–14" BY THE POST TENSIONING INSTITUTE. MEANS, METHODS, AND MATERIALS MAY BE MODIFIED AT THE REQUEST OF THE CONTRACTOR AS LONG AS THEY CONFORM TO THESE STANDARDS AND ARE APPROVED BY THE ENGINEER PRIOR TO CONSTRUCTION.
2. THE CONTRACTOR SUBMIT FOR APPROVAL A ROCK ANCHOR INSTALLATION PLAN THAT INCLUDES ALL MATERIALS, EQUIPMENT, AND METHODS TO BE USED IN THE FURNISHING AND INSTALLATION OF ROCK ANCHORS.

MATERIALS & SPECIFICATIONS:

1. ANCHOR RODS SHALL BE SOLID THREAD BAR WITH 150 KSI YIELD STRENGTH. COUPLINGS SHALL BE CAPABLE OF DEVELOPING THE FULL TENSILE STRENGTH OF THE BAR.
2. ANCHOR RODS SHALL BE EQUIPPED WITH POLYETHYLENE CENTRALIZERS TO ENSURE THAT THE ANCHOR ROD IS CENTERED IN THE CASING AND DRILLED HOLE.
3. ALL STEEL BEARING, JACKING, AND WEDGE PLATES SHALL BE ASTM A572, GRADE 50.
4. PROVIDE PTI CLASS 2 CORROSION PROTECTION WITH GROUT PROTECTED TENDON.
5. THE CONTRACTOR SHALL DESIGN THE INTERIOR CASING AND CASING CENTRALIZERS.
6. PRIMARY AND SECONDARY GROUT MIXTURES SHALL BE DESIGNED BY THE CONTRACTOR IN ACCORDANCE WITH RECOMMENDATIONS PROVIDED BY THE ANCHOR ROD SYSTEM MANUFACTURER. GROUT MIXTURE MATERIALS INCLUDING AGGREGATES SHALL BE IMPORTED MATERIALS. USE OF LOCALLY OBTAINED AGGREGATES WILL NOT BE PERMITTED. SUBMIT GROUT MIXTURE DESIGNS TO THE ENGINEER FOR APPROVAL PRIOR TO CONSTRUCTION.
7. THE GROUT TO BEDROCK BOND SHALL BE DESIGNED TO DEVELOP THE FULL CAPACITY OF THE ANCHOR ROD.
8. THE MAXIMUM ULTIMATE GROUT TO BEDROCK STRENGTH SHALL BE 210 PSI.
9. THE MINIMUM ROCK ANCHOR BEDROCK HOLE DIAMETER SHALL BE 5 INCHES.
10. THE MINIMUM ROCK ANCHOR BORE HOLE LENGTH SHALL BE 20 FEET.

TESTING:

1. THE CONTRACTOR SHALL SUBMIT FOR APPROVAL A TESTING PROGRAM THAT FOLLOWS THE GUIDELINES OF PTI DC35.1–14. THIS SHALL INCLUDE A PROOF TEST.
2. ROCK ANCHORS SHALL BE TESTED IN THE PRESENCE OF THE ENGINEER OR OWNER'S ON SITE REPRESENTATIVE.

PROGRESS SET NOT FOR CONSTRUCTION

R&M CONSULTANTS, INC.
9101 Vanguard Drive
Anchorage, Alaska 99507
rmconsult.com• email@rmconsult.com
phone: 907.522.1707 • fax: 907.522.3403
CORPORATE AUTHORIZATION NUMBER AECC111

Haines Borough
LUTAK DOCK STUDY

No.	Description	Date

Drawn By: PMH/JVC
Checked By: JD/DA
Date: DEC 23, 2016
Phase: PRELIMINARY
Project No: 2443.01
SHEET TITLE: ALTERNATIVE 3 - TENSION ANCHOR DETAILS
SHEET NO: 26 OF 27
C3.6

Z:\project\2443.01 Hb Haines Lutak Dock Study\Civil\ACAD\2443.01 – C3.6 – Rock Anchor Details.dwg
Plotted 12/23/2016 9:44 AM by Jean Cumlat

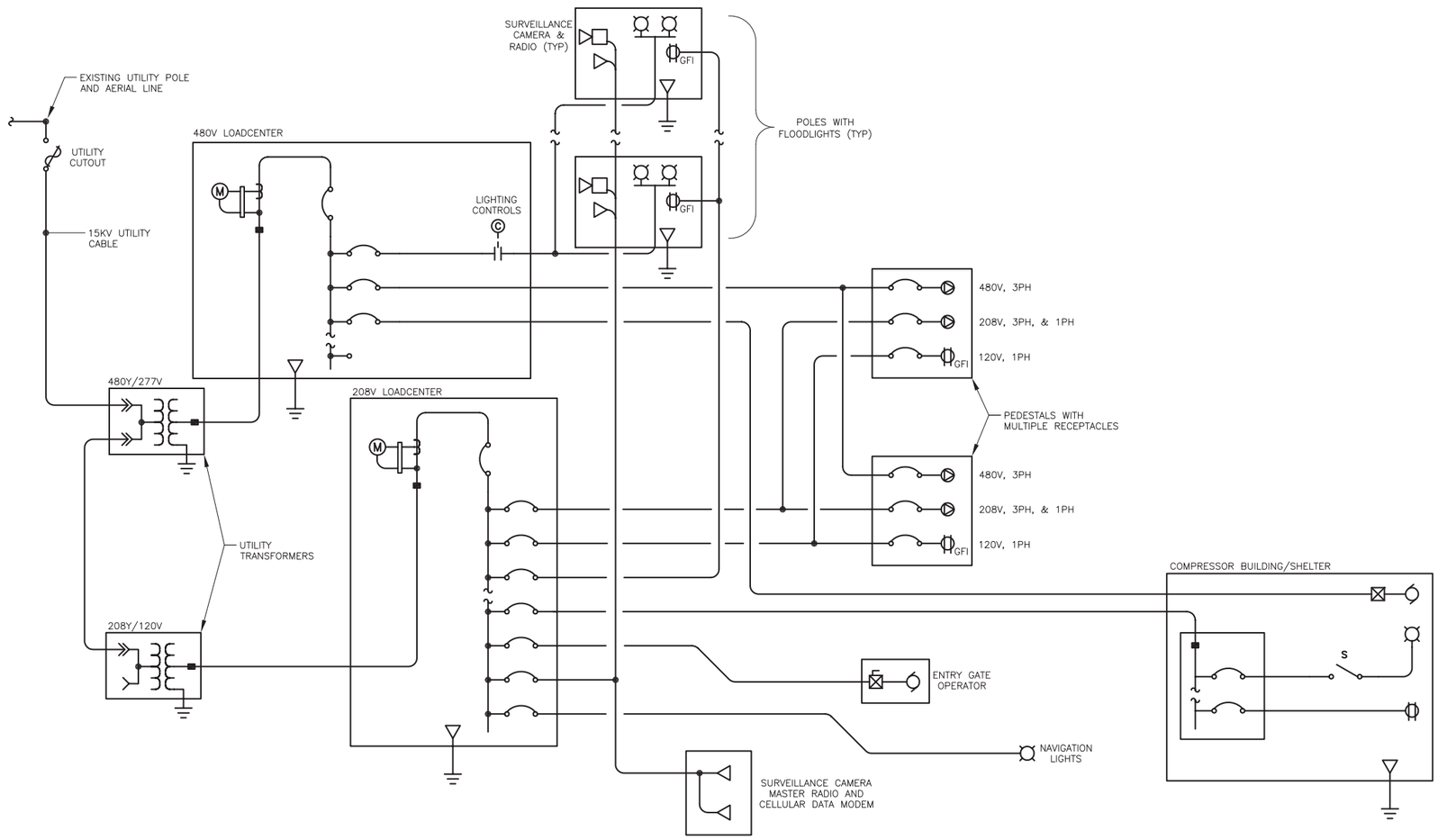

1 SINGLE LINE DIAGRAM – POWER DISTRIBUTION SYSTEM

NO SCALE

PROGRESS SET NOT FOR CONSTRUCTION

R&M CONSULTANTS, INC.
9101 Vanguard Drive
Anchorage, Alaska 99507
www.rmconsultants.com
email: rm@rmconsultants.com
phone: 907.522.1707 • fax: 907.522.3403

HAIGHT & ASSOCIATES
CONSULTING ELECTRICAL ENGINEERS
520 Main Street, Juneau, Alaska 99801
(907) 586-2788

Haines Borough
LUTAK DOCK STUDY

No.	Description	Date

Drawn By: REJ
Checked By: BCH
Date: DEC 1, 2016
Phase: DRAFT CONCEPT
Project No: 2443.01
SHEET TITLE: SINGLE LINE DIAGRAM
SHEET NO: OF 22
E100

Plotted 12/6/2016 8:42 AM by Robbie Jensen F:\Projects\278 R&M Consultants Inc\11 – Haines Lutak Dock 2016\Drawings\Working\E100.dwg

APPENDIX B

Benefit-Cost Analysis of the Lutak Dock Replacement December 2016

Benefit-Cost Analysis of the Lutak Dock Replacement

Prepared for

Haines Borough

December 2016

Prepared by

Northern Economics

Anchorage
880 H Street
Suite 210
Anchorage, Alaska 99501
Phone: 907.274.5600
Fax: 907.274.5601

Seattle
1455 NW Leary Way
Suite 400
Seattle, WA 98107
Phone: 206.747.8475

Email: mail@norecon.com

PROFESSIONAL CONSULTING SERVICES IN APPLIED ECONOMIC ANALYSIS

Principals:
Patrick Burden, M.S. – Chairman
Marcus L. Hartley, M.S. – President
Jonathan King, M.S. – Vice President
Michael Fisher, MBA – Principal
Diane Steele – Office Manager

Consultants:
Logan Blair, M.S.
Leah Cuyno, Ph.D.
Michael Downs, Ph.D.
Gary Eaton, M.S.
Michelle Humphrey, M.S.
Don Schug, Ph.D.
Stephen Weidlich, M.S.
Katharine Wellman, Ph.D.

Administrative Staff:
Terri McCoy, B.A. – Editor

Northern Economics

880 H Street, Suite 210
Anchorage, Alaska 99501
Phone: 907.274-5600
Fax: 907.274-5601

1455 NW Leary Way, Suite 400
Seattle, WA 98107
Phone: 206.747.8475
Email: mail@norecon.com

Preparers

Team Member	Project Role
Michael Fisher	Principal in Charge
Michelle Humphrey	Primary Analyst & Author
Terri McCoy	Technical Editor

Please cite as: *Northern Economics, Inc. Benefit-Cost Analysis of the Lutak Dock Replacement. Prepared for Haines Borough. December 2016.*

Contents

Section		Page
Abbreviations		**ii**
Executive Summary		**1**
1	**Project Description**	**1**
1.1	*Lutak Dock Replacement Alternatives*	*3*
2	**Analysis Approach**	**5**
2.1	*Baseline Scenarios*	*5*
2.2	*Economic Benefit and Costs*	*6*
3	**Results of Benefit-Cost Analysis**	**8**
3.1	*Project Costs*	*8*
3.2	*Transportation Costs*	*9*
3.3	*Maintenance Costs*	*9*
3.4	*Safety*	*10*
3.5	*State of Repair*	*11*
3.6	*Conclusion*	***Error! Bookmark not defined.***
4	**References**	**12**

Table	Page
Table ES-1. Benefit-Cost Analysis Summary Results (millions $2015)	*ES-1*
Table 2. Baseline Assumptions	*5*
Table 3. Project Summary Matrix	*7*
Table 4. Summary of Benefits and Costs (millions $2015)	*8*
Table 5. Transportation Cost Benefits (millions $2015)	*9*
Table 5. Pavement Maintenance Benefits ($2015)	*10*
Table 6. Value of Safety Benefits (millions $2015)	*10*

Figure	Page
Figure 1. Haines Borough General Location Map	*1*
Figure 2. Aerial Photo of the AMHS and Lutak Dock	*2*
Figure 3. AMHS and Lutak Dock	*3*

Abbreviations

AIS	*Abbreviated Injury Scale*
BCA	*Benefit-Cost Analysis*
NPV	*Net Present Value*
PND	*PND Engineers, Inc.*
USACE	*United States Army Corps of Engineers*
VMT	*Vehicle Miles Traveled*

Executive Summary

Lutak Dock plays an integral role in the supply chains that service Haines Borough and the surrounding area. The dock accommodates regularly scheduled shipments of fuel and freight, both of which support consumer and industrial activities in the region.

Originally constructed in 1953 by the U.S. Army Corps of Engineers, the Lutak Dock is in need of repairs, and has reached the end of its credible 60-year service life. Repairing the existing facility is no longer a viable option due to the dock's current level of deterioration and it has been recommended that the borough start planning for a full replacement of Lutak Dock as soon as feasibly possible.

It is likely that the dock will fail in within the next decade, and if that were to happen it would cause significant disruptions to freight and fuel supply chains in the region. Fuel and consumer goods would be diverted to less efficient transportation routes and modes and the costs associated with transporting goods to Haines would increase. The increase in transportation costs is expected to impact the cost of goods and services in Haines for both consumer and industrial end users.

The following benefit-cost analysis attempts to monetize the benefits associated with the replacement of Lutak Dock. The analysis considers three different sets of baseline assumptions and results are presented as the Net Present Value of the benefit or cost over a 35 year study period (2016-2050). The benefits considered in this analysis are realized through the continuation of the current level of operations occurring at Lutak Dock, and do not assume an increase in the level or types of activities supported by Lutak Dock. The primary benefits analyzed are:

1. *Avoided transportation costs of freight resulting from a modal shift from barge to truck*
2. *Avoided pavement maintenance costs resulting from increased truck traffic*
3. *Avoided safety costs resulting from increased truck traffic*
4. *A reduction in the likelihood of facility closures due to structural failures.*

This project is still in the development phase and three alternative designs and costs for the replacement of Lutak Dock are considered in this analysis. Table ES-1 summarizes the findings of the benefit-cost analysis for the replacement of Lutak Dock.

Table ES-1. Benefit-Cost Analysis Summary Results (millions $2015)

	Discounted at 3%			Discounted at 7%		
Measure	Scenario A	Scenario B	Scenario C	Scenario A	Scenario B	Scenario C
Benefit NPV						
Transportation Costs	30.7	40.3	46.8	13.7	20.5	25.9
Maintenance	0.2	0.2	0.2	0.1	0.1	0.1
Safety	1.9	2.5	2.9	0.8	1.3	1.6
Total Benefits	32.8	43.0	50.0	14.6	21.9	27.6
Cost NPV						
Capital Costs	33.0	28.0	21.3	28.6	24.2	18.5
O&M Costs	7.3	6.2	4.7	3.8	3.2	2.5
Total Costs	40.3	34.1	26.0	32.4	27.4	20.9
B/C Ratio	0.81	1.26	1.92	0.45	0.80	1.32

Source: Northern Economics, Inc. 2016.

This page intentionally left blank

1 Project Description

Haines is located between the Chilkoot and Chilkat rivers on Chilkoot Inlet, approximately 150 road miles south of Haines Junction and at the end of the Haines Highway (Figure 1). It has a maritime climate, with temperatures ranging from 10°F to 70°F, and is accessible by water, road, and air (DCCED 2016). The moderate climate, ice-free deep-water port, and year-round road access are advantageous, and support the borough's role as a local transportation hub.

Figure 1. Haines Borough General Location Map

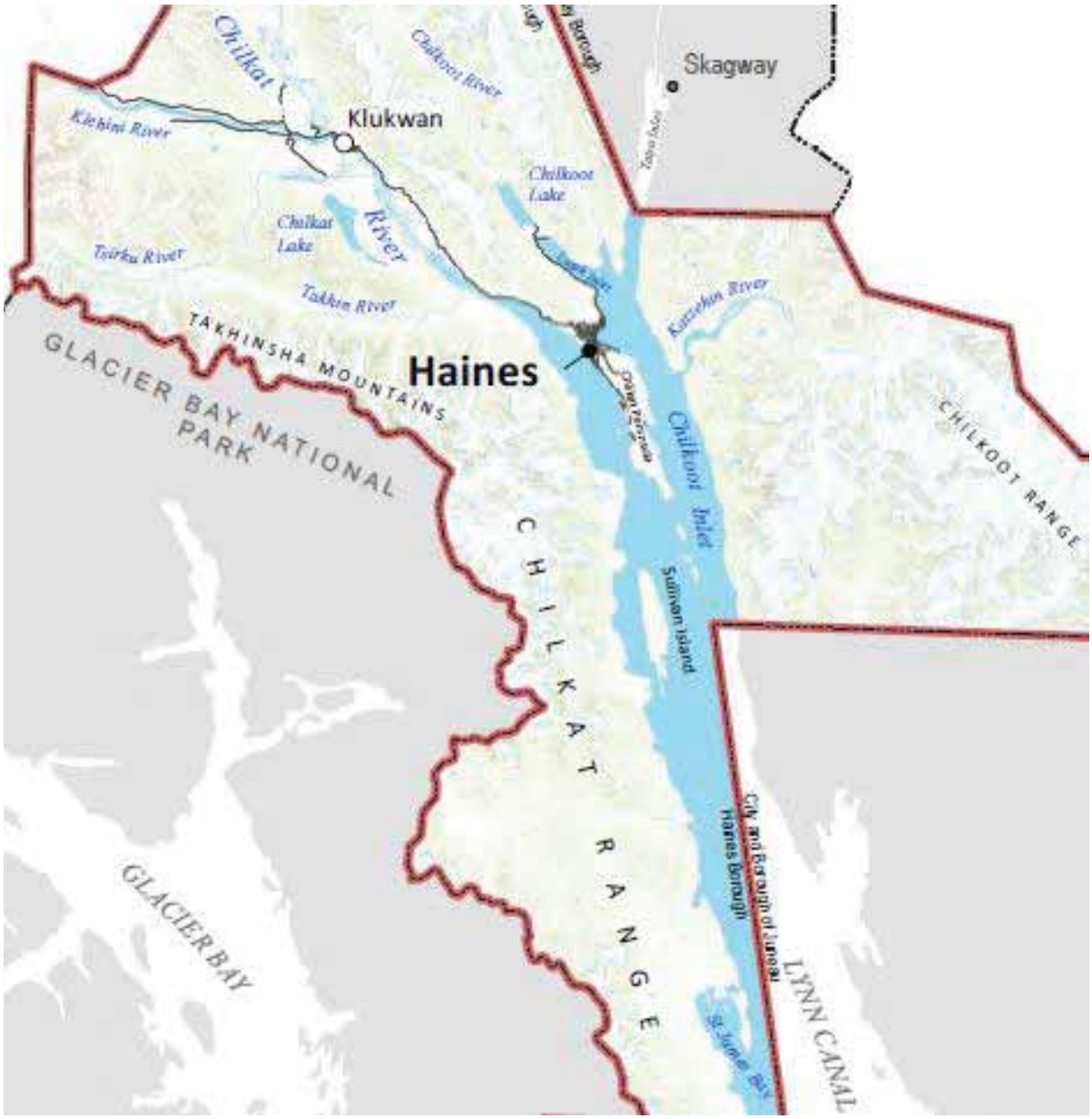

Source: Adapted from Haines Borough 2012a

The Alaska Marine Highway System (AMHS) Terminal and Lutak Dock (Figure 2 and Figure 3) are located near the mouth of Lutak Inlet, roughly four miles north of Haines. Ownership of the dock is split; the borough owns approximately 75 percent of the dock and the State of Alaska owns the remainder of the dock (the portion used as the AMHS Terminal).

Figure 2. Aerial Photo of the AMHS and Lutak Dock

Source: R&M Consultants, Inc. 2016.

Lutak Dock is Haines' primary industrial facility; it is an ice-free dock that accommodates regularly scheduled shipments of fuel and freight for the borough and surrounding area.

Originally constructed in 1953 by the U.S. Army Corps of Engineers, Lutak Dock is a closed cell sheet pile dock with a concrete cap along the seaward perimeter of the cells (PND 2010). The dock offers four acres of storage space, 750 feet of berthing space, and has a depth ranging from 24 feet on the north end to 33 feet on the south end. A number of forklifts (owned by Alaska Marine Lines) are available for use at the dock, including two 35-ton diesel forklift trucks (Northern Economics, Inc. 2012).

Figure 3. AMHS and Lutak Dock

Source: Northern Economics 2011

Lutak Dock currently operates year-round and is equipped to handle loading and unloading operations for bulk cargo, breakbulk cargo, roll-on roll-off cargo, petroleum products transshipment, and passenger operations (Haines Borough, 2012). The two primary users of Lutak Dock are Alaska Marine Lines (AML) and Delta Western, which move cargo and bulk fuel respectively. In fiscal year 2016, the dock generated approximately $421,600 in dockage and wharfage revenues (Haines Borough, 2016).

According to a marine facilities structural assessment undertaken by PND Engineers, Inc. (PND) in 2014, Lutak Dock is in need of repairs, and it is the opinion of PND that the structure has reached the end of its credible 60-year service life.

1.1 Lutak Dock Replacement Alternatives

The borough and their team of consultants are in the development phase of the Lutak Dock Replacement project and three design alternatives are currently being considered.

Alternative 1: Berthing Dolphins

The first alternative evaluated in the benefit-cost analysis (BCA) includes removing the entire existing dock and laying the slopes back and armoring them at a 2:1 slope. Berthing dolphins would then be constructed and access provided via a transfer bridge. The berthing dolphins are a stand-alone, pile-supported structure that includes a fender system. Below are some important points regarding Alternative 1:

- *The entire existing cell structure is removed.*
- *This alternative reduces the amount of available uplands by about 1.7 acres.*
- *This alternative eliminates the multi-purpose capabilities of the dock.*
- *This alternative limits cargo barge operations to only using the transfer bridge for roll-on roll-off.*

The estimated cost for design, permitting, and construction of Alternative 1 is $24.1 million.

Alternative 2: Encapsulated Cells with Modified Diaphragm

This alternative involves constructing a new sheet pile cell around the existing cells. The new cells would have semicircular front and backs with straight walls connecting these. The shape of this is termed a "modified diaphragm" and has been outlined in design manuals dating back to the 1980s and prior. The straight wall sections would go in between the existing cells where the closure arcs now stand. Below are some important points regarding Alternative 2:

- *This alternative maintains the same general footprint and use as the existing dock.*
- *Demolition is limited to the existing pile cap, closure arcs, and top section of existing fill. This saves cost.*
- *There are some challenges and risk associated with driving new sheets through the old closure arc area. Obstructions such as boulders would be difficult to remove in the tight space.*

The estimated cost for design, permitting, and construction of Alternative 2 is $31.6 million.

Alternative 3: Encapsulated Cells with Modified Diaphragm and Reclaimed Uplands

Alternative 3 is almost identical to Alternative 2, but also includes the reclamation of several cells that have been partially excavated and are owned by the borough. The reclamation of these cells would result in about one-half of an acre of additional reclaimed uplands compared to Alternative 2.

The estimated cost for design, permitting, and construction of Alternative 3 is $37.3 million.

2 Analysis Approach

The BCA for this project was prepared according to Benefit-Cost Analysis Analyses Guidance for Applicants for FASTLANE Grants, published November 17, 2016, and with reference to OMB Circulars A-4 and A-94 concerning benefit-cost analysis.

This BCA considers all reasonable project costs and monetizable benefits over a 35-year horizon (2016–2050). All values are expressed in constant 2015 dollars.

2.1 Baseline Scenarios

The BCA quantifies the public benefits that will accrue if the existing freight and passenger operations continue resulting from the replacement of Lutak Dock. The "without project," or baseline, scenario assumes that the existing dock will become nonoperational in three to ten years, and that freight and passenger activities will be diverted to other modes of transportation.

Due to the uncertainty surrounding the existing dock's operational sustainability and feasible logistical alternatives to the activities currently taking place at Lutak Dock, this BCA considers three baseline scenarios. Table 1 summarizes the assumptions used for each baseline scenario.

Table 1. Baseline Assumptions

Baseline Assumption	Scenario A (low)	Scenario B (mid)	Scenario C (high)
Operational closure (year)	2027	2022	2019
Annual maintenance costs ($)	4,000	4,000	4,000
Diverted freight originating in Seattle (%)	45	45	45
Diverted freight originating in Anchorage (%)	10	10	10
Diverted freight originating in Valdez (%)	45	45	45
Project Replacement Alternative	Alt. 3	Alt. 2	Alt. 1

Source: Northern Economics, Inc., 2016.

Operational Closure

Based on structural assessments conducted by PND in 2010 and 2014, Lutak Dock is believed to have exceeded its expected service life and is considered to be operating on "borrowed time." The BCA considers operational closure due to structural failure after 10 years (2026), 5 years (2021), and 3 years (2019). The level and rate of corrosion recorded in the structural assessments of Lutak Dock suggest that these are reasonable assumptions.

Annual Maintenance Costs

In fiscal years 2015 and 2016, Haines Borough budgeted $4,000 for dock maintenance and repairs, but historically funds have not been set aside for maintenance activities on an annual basis. Moving forward, the borough estimates allocating the same level of spending for annual maintenance and repair of the existing dock.

Diverted Freight Routes

Lutak Dock is Haines' primary industrial facility and plays a critical role in the importation of freight that is used to support local businesses in Haines as well as industrial activities—primarily mines—in the surrounding region. AML is one of the primary users of Lutak Dock, providing weekly freight service between Seattle, Washington and Haines. If Lutak Dock were to become nonoperational, freight that is currently brought into Haines over the dock would most likely be transported via truck or a combination of barge and truck. Logistically, there are three feasible transportation route alternatives:

- *Freight is trucked directly from Seattle to Haines (approximately 1,805 road miles)*
- *Freight is shipped from Seattle to Anchorage (weekly service provided by AML) and then trucked from Anchorage to Haines (756 road miles)*
- *Freight is shipped from Seattle to Valdez (weekly service provided by AML), and then trucked from Valdez to Haines (691 road miles)*

All three freight transportation alternatives would involve a modal change from barge to truck for at least a portion of the route. It is likely that industry would seek out the most cost-effective means of transportation for the different types of freight that are currently being transported by AML, and all three routes would be used to some degree. The BCA assumes that 45 percent of the forecasted freight volumes would be trucked directly from Seattle to Haines, 10 percent of freight would get barged to Anchorage and then trucked to Haines, and 45 percent of freight would be barged to Valdez and then trucked to Haines. The distribution of diverted freight over the three alternative routes is based on existing transportation networks, and the transportation services and facilities available along each route.

2.2 Economic Benefit and Costs

Following the development of the baseline and project scenarios, the following impacts were considered and monetized for the BCA:

5. *Avoided transportation costs of freight resulting from a modal shift from barge to truck;*
6. *Avoided pavement maintenance costs resulting from a modal shift from marine transport (primarily barge) to road;*
7. *Avoided safety costs resulting from a modal shift from marine transport to road;*
8. *A reduction in the likelihood of facility closures due to structural failures.*

The Project Summary matrix (Table 2) provides a summary of the population impacted, the benefits of the project, and a reference to where each impact is discussed in this report. It should be noted that this BCA does not include any impacts to Canadian mining operations in the surrounding region that frequently use Lutak Dock to import supplies.

Table 2. Project Summary Matrix

Current Status/ Baseline & Problem to be addressed	Change to Baseline/ Alternatives	Type of Impacts	Population Affected by impacts	Economic Benefit	Summary of Results	Page Reference in BCA
Primary port for cargo, fuel, and passengers in Haines has reached the end of its credible service life and does not meet current USACE minimum factors of safety for cellular structures	Replace the existing dock (see Section 1.1 Lutak Dock Replacement Alternatives)	(1) Transportation	Businesses and consumers in Haines and surrounding region. (Industrial and consumer goods)	Reduced freight transportation costs	Estimated transportation cost savings	Section 3.2 Page 9
		(2) Maintenance	Motorists using routes connecting Haines to Seattle, Valdez, or Anchorage	Reduced maintenance cost resulting from lower traffic volumes	Estimated maintenance cost savings	Section 3.3 Page 9
		(3) Safety	Motorists using routes connecting Haines to Seattle, Valdez, or Anchorage	Reduced costs associated with lower crash rates and resulting injuries	Estimated accident cost savings	Section 3.4 Page 10
		(4) State of Good Repair	Organizations using Lutak Dock and residents of Haines that rely on goods moved across Lutak Dock	Reduce frequency of facility closures due to disrepair and safety risk	Qualitative assessment	Section 3.5 Page 11

Source: Northern Economics, Inc., 2016.

3 Results of Benefit-Cost Analysis

This BCA was prepared under the guidelines of the U.S. Department of Transportation for a FASTLANE Grant Application. The following section summarizes the results and outlines the project costs, benefits, and assumptions used in this analysis.

The proposed replacement of Lutak Dock will result in a variety of monetizable benefits, the sum of which exceed the project costs under three of the six scenarios considered in this analysis. It is important to note that there are also non-quantifiable social benefits that would result from the replacement of Lutak Dock that are not considered in the benefit-cost calculations. Table 3 summarizes the findings of the BCA. The ratio of monetized benefits to costs (B/C ratio) ranges from 1.92 to 0.45 depending on the discount rate and assumptions applied. The average B/C ratio is 1.33 when discounted at 3 percent, and 0.86 when discounted at 7 percent. The following sections describe the costs and benefits used to calculate the values displayed in the table below.

Table 3. Summary of Benefits and Costs (millions $2015)

	Discounted at 3 Percent			Discounted at 7 Percent		
Measure	Scenario A	Scenario B	Scenario C	Scenario A	Scenario B	Scenario C
Benefit NPV	32.8	43.0	50.0	14.6	21.9	27.6
Cost NPV	40.3	34.1	26.0	32.4	27.4	20.9
B/C Ratio	0.81	1.26	1.92	0.45	0.80	1.32

Source: Northern Economics, Inc., 2016.

The results of the BCA are presented using the summary measurement of net present value (NPV). The NPV shows the present value of the cash flows that occur over the analysis period (2016–2050) under the discount rates of 3 and 7 percent. The discount rate is used to discount future cash flows to the present. The discount rate takes into account the time value of money and the uncertainty associated with future cash flows (put simply, the principle of discounting works on the assumption that a dollar today is worth more than a dollar a year or more in the future). The discount rates of 3 and 7 percent follow the guidance of OMB Circular A-4 (OMB, 2016).

3.1 Project Costs

Design, permitting, and construction of the Lutak Dock replacement are scheduled to occur over a three-year period from 2017–2020. The existing barge ramp will remain operational throughout the entire construction period of this project, but the face of Lutak Dock is expected to be nonoperational for approximately three months. During the period in which the dock face is closed, some regularly scheduled port calls (Delta Western, AML, and AMHS) may need to be redirected or postponed.

There are currently three design alternatives for the Lutak Dock replacement project that have capital costs ranging from roughly $24.1 million to $37.3 million (not discounted). The project costs used in the benefit- cost analysis vary by scenario; Scenario A assumes project costs associated with Alternative 3, Scenario B assumes project costs associated with Alternative 2, and Scenario C assumes project costs associated with Alternative 1. For each scenario the analysis assumes annual maintenance costs will be approximately one percent of the alternative's capital cost and major maintenance to be five percent of the capital cost and occur every 10 years. These assumptions were developed based on input from the engineering and design team.

3.2 Transportation Costs

The largest monetizable benefit of replacing Lutak Dock is the transportation cost savings realized through the continuation of AML barge service into Haines. The majority of consumer and industrial goods that come into Haines are currently transported by barge, which is the most cost-efficient mode of transportation in the region. If Lutak Dock were to become nonoperational, freight would most likely be transported via truck directly from Seattle, or barged to Valdez or Anchorage and then trucked to Haines. The increased use of truck transport, which costs more per mile and increases the total mileage traveled, would increase transportation costs relative to the current system.

To calculate the transportation cost benefits associated with the proposed replacement of Lutak Dock, the analysis uses the average freight revenue per ton-mile for barge and truck as a proxy for the difference in cost between the two modes (BTS, 2016). Based on national transportation statistics, the average freight revenue per ton-mile for freight moved by truck is over seven times as much as the average freight revenue per ton-mile for freight moved by barge. It is likely that the difference in modal transportation costs is even higher for the routes that would be used to transport freight into Haines due to a number of border crossings, road conditions, and terrain along the alternative routes.

Table 4. Transportation Cost Benefits (millions $2015)

Baseline Scenario	Discounted at 3 Percent	Discounted at 7 Percent
Scenario A	30.7	13.7
Scenario B	40.3	20.5
Scenario C	46.8	25.9

Source: Northern Economics, Inc. 2016.

Table 4 shows the transportation cost benefits under each of the baseline scenarios. The NPV of transportation cost benefits resulting from the replacement of Lutak Dock range from $13.7 million to $46.8 million depending on which baseline assumptions and discount rates are applied.

3.3 Maintenance Costs

The replacement of Lutak Dock, allowing for the continuation of AML's weekly barge service to Haines, would reduce pavement maintenance costs that would otherwise occur if freight is transported via road instead of passing over the dock.

If Lutak Dock were to become nonoperational, the most logistically feasible freight transportation routes would be to truck freight directly from Seattle to Haines, or transport freight via barge to AML's facilities in either Valdez or Anchorage, and then transfer the freight to be trucked to Haines. All three freight transportation alternatives would increase truck traffic and pavement maintenance cost along the specified routes. The reduction in pavement maintenance cost resulting from the replacement of Lutak Dock is monetized based on the recommended average maintenance costs by vehicle and highway class, and vehicle miles traveled (VMT). The analysis of pavement maintenance costs is limited to road segments in the United States and excludes those segments in Canada. Table 5 shows the NPV of pavement maintenance benefits under each of the baseline scenarios.

Table 5. Pavement Maintenance Benefits ($2015)

Baseline Scenario	Discounted at 3 Percent	Discounted at 7 Percent
Scenario A	154,461	68,792
Scenario B	202,844	103,254
Scenario C	235,484	130,254

Source: Northern Economics, Inc., 2016.

The NPV of the pavement maintenance benefits resulting from the replacement of Lutak Dock range from just under $69,000 to over $235,000 under the three baseline scenarios and two discount rates considered in this analysis.

3.4 Safety

In addition to the increased maintenance cost, there is also an increased risk of accidents and injuries associated with increased truck traffic. The proposed replacement of Lutak Dock supports the continuation of AML's weekly barge service, and reduces the amount of freight being transported over the road system.

The road distances of the three alternative routes (see baseline assumptions for detailed description of alternative routes) in conjunction with freight volume forecasts are used to estimate the increase in road traffic, presented in VMT. The most recent crash statistics for Alaska were then applied to calculate the incremental increase in VMT and monetize the value of vehicle related injuries according to the maximum Abbreviated Injury Scale (AIS) (ADOT&PF, 2015). The data recorded by ADOT&PF are not presented in the AIS format, so the analysis uses a conversion from more general injury categories to the preferred AIS format per the BCA Resource Guide (USDOT, 2016). Table 6 shows the monetized value (in 2015 dollars) of the accident cost reduction benefits associated with the replacement of Lutak Dock. Unlike the calculations used to monetize the pavement maintenance benefit, the safety benefit calculations use the entire road distance of each alternative route, even for the segments that pass through Canada.

Table 6. Value of Safety Benefits (millions $2015)

	Discounted at 3 Percent	Discounted at 7 Percent
Scenario A	1.9	0.8
Scenario B	2.5	1.3
Scenario C	2.9	1.6

Source: Northern Economics, Inc., 2016.

Lutak Dock also plays a significant role in the fuel distribution network in Haines and the surrounding region. Delta Western is one of the primary users of Lutak Dock and owns a tank farm with a capacity of 3.25 million gallons adjacent to Lutak Dock. Fuel shipped through Haines is used locally and sold to Canadian wholesalers in the surrounding area. It is unclear whether this tank farm would be operationally feasible without Lutak Dock, as trucking fuel from other locations would be costly and time consuming. If this tank farm were to remain operational and fuel were to be transferred via the road system, this would significantly increase truck traffic on the alternative routes and the value of safety benefits would increase accordingly.

Explosives and other hazardous cargo also make up a significant portion of the total freight moved over Lutak Dock, supporting various mining operations in the area. If Lutak Dock were to cease operations, these cargo types would be rerouted, but it is unclear what mode or route would be used at this time. While important, these benefits are difficult to quantify and therefore were not monetized in the BCA. For these reasons, the monetized value of road safety presented in this analysis should be seen as a conservative estimate.

3.5 State of Repair

Lutak Dock was originally designed and constructed in 1953. In a 2014 structural assessment, PND concluded that "the structure has reached the end of a credible 60-year service life" and that further utilization of Lutak Dock is effectively on "borrowed time" (PND, 2015). A conditions assessment revealed that the dock has experienced significant corrosion loss of the base metal in the sheet piles over the last 63 years and the bulkhead does not meet the Industry standard safety requirements. Dock inspections completed in 1976, 1988, 2003, and 2014 document the substantial growth of corrosion over the life of the dock. PND does not believe repairing the existing facility is a viable option due to the dock's current level of deterioration and recommends planning for a full replacement of Lutak Dock as soon as feasibly possible.

The replacement of Lutak Dock would reduce the likelihood of unplanned facility closures resulting from structural failures. In 2004, there was a partial collapse of one of the cells on the portion of the dock operated by the State of Alaska. This led to temporary interruptions in regularly scheduled AMHS service and costly repairs (approximately $14 million). The partial collapse of the cell was considered to be a localized failure, but the presence of sink holes in other areas of the working surface is consistent with the loss of fill and a localized or complete failure of other portions of the dock is considered likely in the near future.

While these costs are not monetized in the BCA, an improvement to the state of repair of Lutak Dock is seen as a valuable benefit that further demonstrates the public benefits of the proposed dock replacement.

4 References

Alaska Department of Commerce, Community, and Economic Development (DCCED). Community Database Online. Available at https://www.commerce.alaska.gov/dcra/DCRAExternal. December, 2016.

Alaska Department of Transportation and Public Facilities (ADOT&PF). 2011 Alaska Traffic Crashes. Available at http://www.dot.alaska.gov/stwdplng/transdata/pub/accidents/2011_AK_CrashData.pdf. July, 2015.

Bureau of Transportation Statistics (BTS). National Transportation Statistics. Available at http://www.rita.dot.gov/bts/sites/rita.dot.gov.bts/files/publications/national_transportation_statistics/index.html. January, 2016.

Haines Borough. Haines Borough 2025 Comprehensive Plan. September, 2012.

Haines Borough. Port revenue and expense data prepared at request of Northern Economics, Inc. December, 2016.

Northern Economics, Inc. Benefit-Cost Analysis of the Lutak Dock Replacement. Prepared for Haines Borough. December 2016.

Office of Management and Budget (OMB). Circulars A-4. Available at https://www.whitehouse.gov/omb/circulars_a004_a-4. February, 2016.

PND Engineers, Inc. Haines Maine Facilities Condition Assessment. Prepared for Haines Borough. June, 2010.

PND Engineers, Inc. Lutak Dock Structural Assessment. Prepared for Haines Borough. November, 2014.

United States Department of Transportation (USDOT). Benefit-Cost Analysis Resource Guide. Available at https://www.transportation.gov/office-policy/transportation-policy/benefit-cost-analysis-bca-resource-guide. November, 2016.

APPENDIX C

Alternatives Analysis Summary Matrix

TABLE 1: LUTAK DOCK REPLACEMENT, ALTERNATIVES ANALYSIS SUMMARY

ALT. NO.	DESCRIPTION	PROS	CONS	LEVEL OF SERVICE	CAPITAL COST
1A	ENCAPSULATE USING MODIFIED DIAPHRAGM	• EFFICIENT AND COST EFFECTIVE • MAINTAINS EXISTING FOOTPRINT • ACCOMMODATES CURRENT USERS INCLUDING PASS PASS CARGO OPERATIONS • RECLAIM ABOUT ½ ACRE UPLANDS AT CELLS 5, 6, AND 7	• PILE DRIVING RISK DURING CONSTRUCTION • ENCAPSULATES EXISTING SHEETS AND POOR QUALITY FILL	• HIGH	• $37,420,000
1B	ENCAPSULATE USING MODIFIED DIAPHRAGM	• EFFICIENT AND COST EFFECTIVE • MAINTAINS EXISTING FOOTPRINT • ACCOMMODATES CURRENT USERS INCLUDING PASS PASS CARGO OPERATIONS	• PILE DRIVING RISK DURING CONSTRUCTION • ENCAPSULATES EXISTING SHEETS AND POOR QUALITY FILL • DOES NOT RECLAIM UPLANDS AT CELLS 5, 6, AND 7	• HIGH	• $31,989,000
2	PLATFORM DOCK (STEEL PILE-SUPPORTED CONCRETE DECK)	• ALL NEW FACILITIES • HIGHER LEVEL OF SEISMIC PERFORMANCE • MAINTAINS EXISTING FOOTPRINT AND RECLAIMS ½ ACRE UPLANDS AT CELLS 5, 6, AND 7 • ACCOMMODATES CURRENT USERS INCLUDING PASS PASS CARGO OPERATIONS	• HIGHEST COST	• HIGH	• $61,840,000
3A	DOLPHINS AND TRANSFER BRIDGE	• ALL NEW FACILITIES	• LOSE APPROXIMATELY 1.7 ACRES OF UPLANDS • LOSE ABILITY TO USE PASS PASS FOR CARGO OPERATIONS • LOSE ABILITY TO SIDE LOAD OVER DOCK FACE	• MEDIUM	• $25,383,000
3B	DOLPHINS AND TRANSFER BRIDGE	• LEAST COST • ALL NEW FACILITIES	• LOSE APPROXIMATELY 1.7 ACRES OF UPLANDS • LOSE ABILITY TO USE PASS PASS FOR CARGO OPERATIONS • LOSE ABILITY TO SIDE LOAD OVER DOCK FACE • SERVICEABILITY LIMITED TO EXISTING FUEL AND CARGO BARGES	• MEDIUM	• $21,166,000

Haines Lutak Dock

Design & Development Concepts Report

March 2017