LUTAK DOCK

DESIGN & DEVELOPMENT CONCEPTS

PRELIMINARY DRAWINGS
HAINES, ALASKA

12/15/2016

MAYOR
JANICE HILL

BOROUGH MANAGER
WILLIAM SEWARD

DIRECTOR OF PUBLIC FACILITIES
BRAD RYAN

HARBORMASTER
SHAWN BELL

Designed By:

R&M CONSULTANTS, INC.
9101 Vanguard Drive
Anchorage, Alaska 99507
rmconsult.com • email@rmconsult.com
phone: 907.522.1707 • fax: 907.522.3403

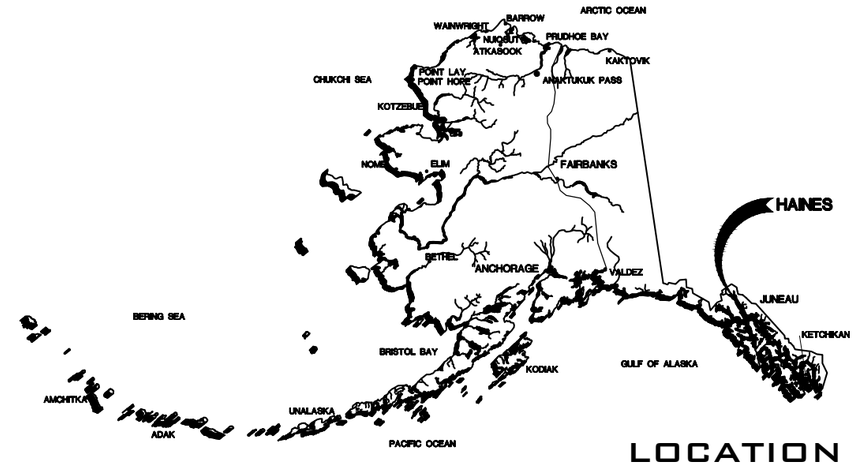

LOCATION

VICINITY

INDEX OF DRAWINGS

SHT	TITLE
G1.0	COVER
G2.0	ALTERNATIVES MATRIX
G3.0	DESIGN VESSELS & VEHICLES
G4.0	EXISTING SITE PLAN
G4.1	EXISTING WHARF DETAILS
C1.0	ALTERNATIVE 1A, MODIFIED DIAPHRAGM
C1.1	ALTERNATIVE 1B, MODIFIED DIAPHRAGM
C1.2	ALTERNATIVE 1A, PLAN AND SECTIONS
C1.3	ALTERNATIVE 1B, PLAN
C1.4	ALTERNATIVE 1, DETAILS
C1.5	ALTERNATIVE 1, FENDER DETAILS
C1.6	BARGE RAMP SITE PLAN
C1.7	BARGE RAMP, DECK TRUSS AND TRANSFER BRIDGE
C1.8	BARGE RAMP, 3 PILE DOLPHIN
C1.9	BARGE RAMP, DETAILS
C2.0	ALTERNATIVE 2, PILE SUPPORTED DOCK
C2.1	ALTERNATIVE 2, PILE DOCK PLAN AND ELEVATION
C2.2	ALTERNATIVE 2, ABUTMENT SECTION
C2.3	ALTERNATIVE 2, HAUNCHED DECK PANELS AND PILE CAP DETAILS
C3.0	ALTERNATIVE 3, DOLPHIN FACE
C3.1	ALTERNATIVE 3, PLAN
C3.2	ALTERNATIVE 3, ELEVATION
C3.3	ALTERNATIVE 3, 4 PILE DOLPHIN DETAILS
C3.4	ALTERNATIVE 3, TENSION ANCHOR DETAILS
E100	SINGLE LINE DIAGRAM

INDEX

Z:\project\2443.01 Hb Haines Lutak Dock Study\Civil\ACAD\2443.01 - G1 Cover Sheet.dwg
Plotted 12/13/2016 4:38 PM by Mike Adams

ALTERNATIVES MATRIX:

Alt. No.	Description	Pros	Cons	Level of Service	Capital Cost
1A	Encapsulate using Modified Diaphragm	• Efficient and cost effective • Maintains existing footprint • Accommodates current users including pass pass cargo operations • Reclaim about ½ acre uplands at cells 5, 6, and 7	• Pile driving risk during construction • Encapsulates existing sheets and poor quality fill	• High	• $37,300,000
1B	Encapsulate using Modified Diaphragm	• Efficient and cost effective • Maintains existing footprint • Accommodates current users including pass pass cargo operations	• Pile driving risk during construction • Encapsulates existing sheets and poor quality fill • Does not reclaim uplands at cells 5, 6, and 7	• High	• $31,900,000
2	Platform Dock (Steel Pile-Supported Concrete Deck)	• All new facilities • Higher level of seismic performance • Maintains existing footprint and reclaims ½ acre uplands at cells 5, 6, and 7 • Accommodates current users including pass pass cargo operations	• Highest cost	• High	• $61,000,000
3	Dolphins and Transfer Bridge	• Least cost • All new facilities	• Lose approximately 1.7 acres of uplands • Lose ability to use pass pass for cargo operations • Lose ability to side load over dock face	• Medium	• $24,100,000

PROGRESS SET NOT FOR CONSTRUCTION

R&M CONSULTANTS, INC.
9101 Vanguard Drive
Anchorage, Alaska 99507
rmconsult.com• email@rmconsult.com
phone: 907.522.1707 • fax: 907.522.3403

Haines Borough
LUTAK DOCK STUDY

No.	Description	Date

Drawn By: PMH
Checked By: JD/DA
Date: DEC 15, 2016
Phase: PRELIMINARY
Project No: 2443.01
SHEET TITLE: ALTERNATIVES MATRIX
SHEET NO: 2 OF 25
G2.0

Z:\project\2443.01 Hb Haines Lutak Dock Study\Civil\ACAD\2443.01 – G2.0 Notes.dwg
Plotted 12/13/2016 5:01 PM by Mike Adams

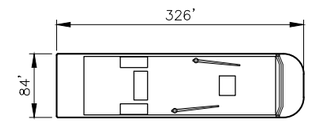

FUEL BARGE
1.) MAXIMUM DRAFT: 19'
2.) DISPLACEMENT: 15,000 SHORT TON

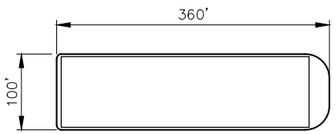

CARGO BARGE
1.) MAXIMUM DRAFT: 22'
2.) DISPLACEMENT: 23,000 SHORT TON

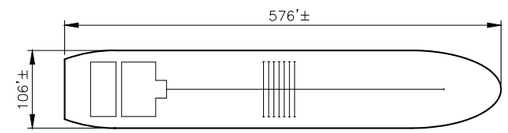

HMI CAPE LOOKOUT SHOALS (BULK TANKER)
1.) MAXIMUM DRAFT: 37'
2.) DISPLACEMENT: 54,000 SHORT TON

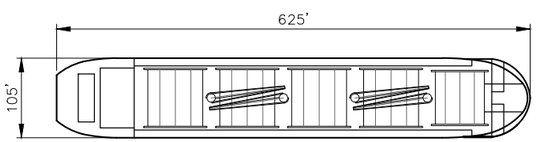

HANDY MAX (BULK CARGO)
1.) MAXIMUM DRAFT: 30–40'
2.) DISPLACEMENT: 40,000–50,000 SHORT TON

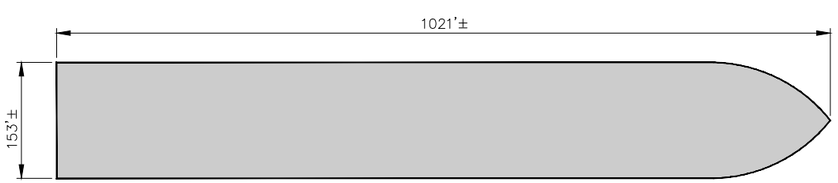

PASSENGER CRUISE LINER
1.) MAXIMUM DRAFT: 28.9
2.) DISPLACEMENT: 64,474 SHORT TON

1 **DESIGN VESSELS**
Scale: 1:100

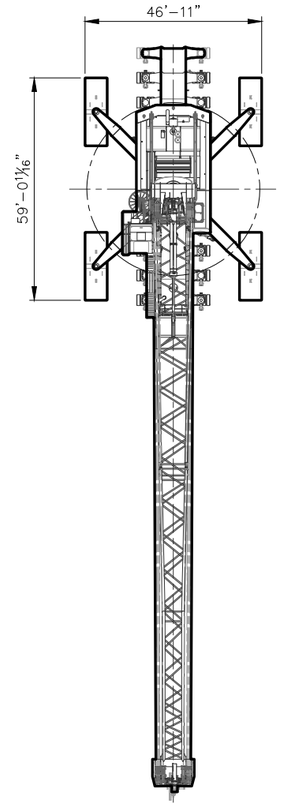

2 **LHM 420 - MOBILE HARBOR CRANE**
Scale: 1/16" = 1'-0"

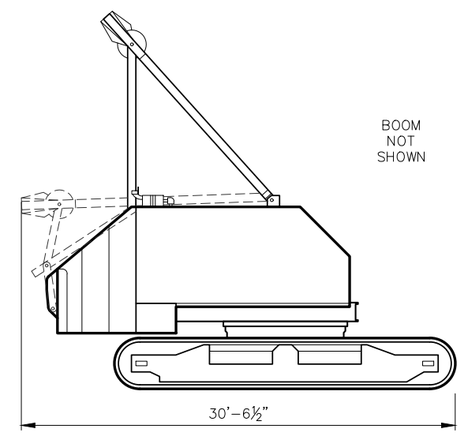

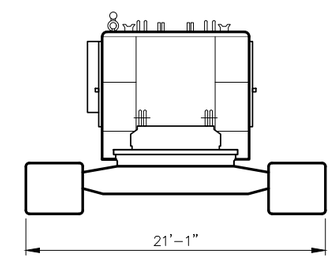

3 **MANITOWOC 4000 W**
Scale: 1/4" = 1'-0"

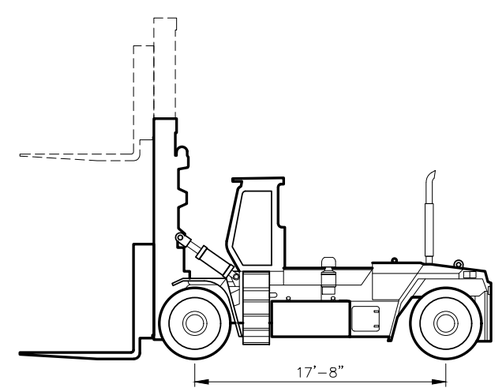

4 **HYSTER H800-1050HD/S FORKSLIFT**
Scale: 3/16" = 1'-0"

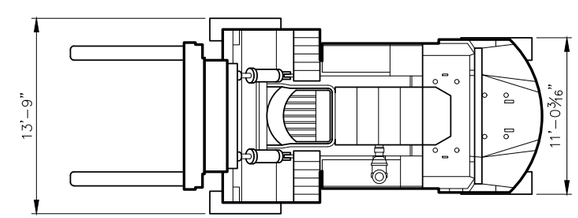

PROGRESS SET
NOT FOR
CONSTRUCTION

R&M CONSULTANTS, INC.
9101 Vanguard Drive
Anchorage, Alaska 99507
rmconsult.com• email@rmconsult.com
phone: 907.522.1707 • fax: 907.522.3403

Haines Borough
LUTAK DOCK STUDY

No.	Description	Date

Drawn By: PMH
Checked By: JD/DA
Date: DEC 15, 2016
Phase: PRELIMINARY
Project No: 2443.01
SHEET TITLE: DESIGN VESSELS AND VEHICLES
SHEET NO: 3 OF 25
G3.0

Z:\project\2443.01 Hb Haines Lutak Dock Study\Civil\ACAD\2443.01 – G3.0 Design Vessels.dwg
Plotted 12/13/2016 4:39 PM by Mike Adams

1 **EXISTING SITE PLAN**

Scale: 1:100

0 100' 200'

PROGRESS SET
NOT FOR
CONSTRUCTION

R&M CONSULTANTS, INC.
9101 Vanguard Drive
Anchorage, Alaska 99507
rmconsult.com• email@rmconsult.com
phone: 907.522.1707 • fax: 907.522.3403

Haines Borough
LUTAK DOCK STUDY

No.	Description	Date

Drawn By: PMH
Checked By: JD/DA
Date: DEC 15, 2016
Phase: PRELIMINARY
Project No: 2443.01
SHEET TITLE: EXISTING SITE PLAN

SHEET NO: 4 OF 25

G4.0

Z:\project\2443.01 Hb Haines Lutak Dock Study\Civil\ACAD\2443.01 – G4.0 Existing Site Plan.dwg
Plotted 12/13/2016 4:40 PM by Mike Adams

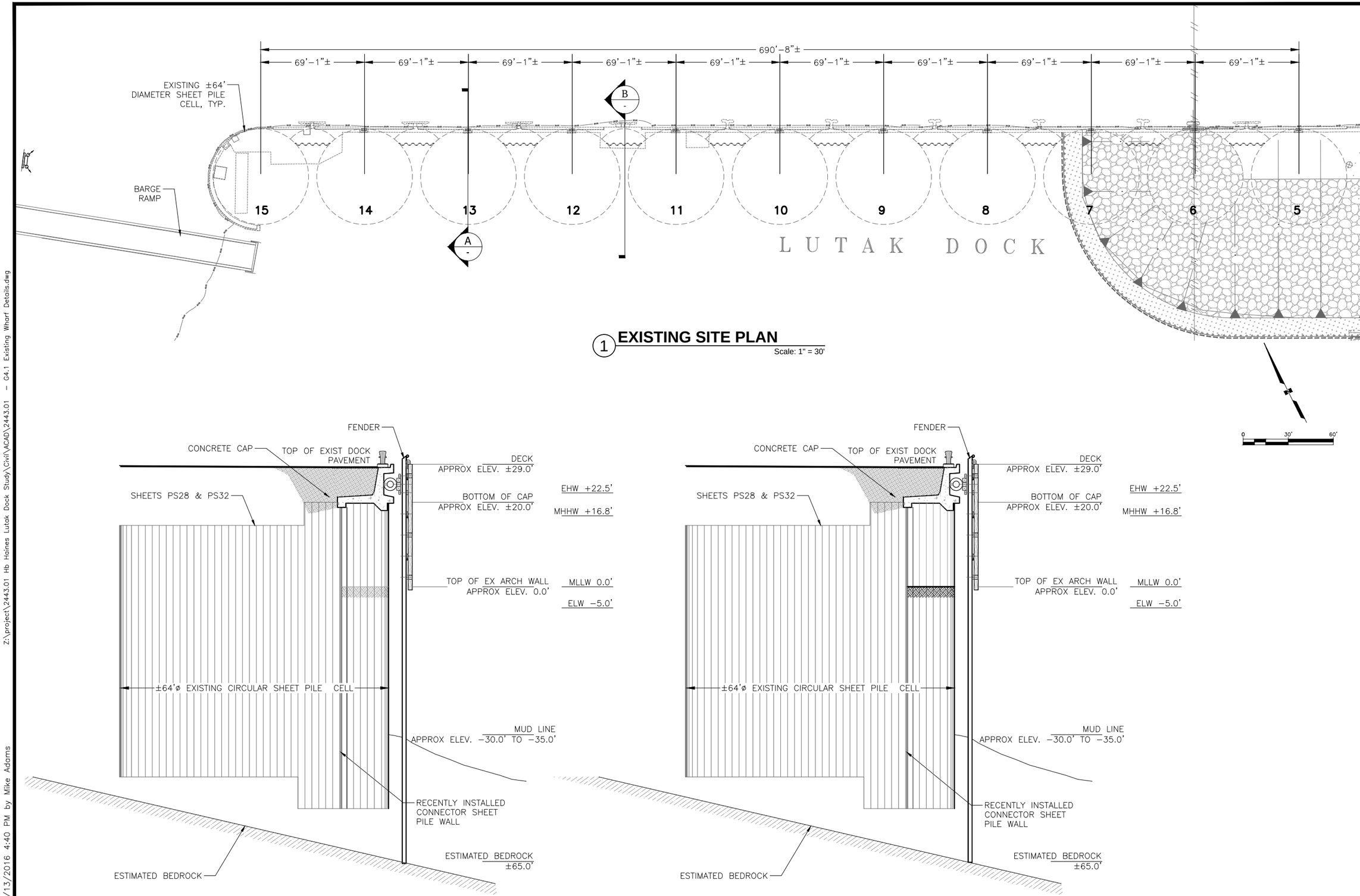

1 EXISTING SITE PLAN
Scale: 1" = 30'

A EXISTING WHARF AT CENTER OF CELL
Scale: 3/32" = 1'-0"

B EXISTING WHARF SECTION AT CLOSURE ARC
Scale: 3/32" = 1'-0"

PROGRESS SET NOT FOR CONSTRUCTION

R&M CONSULTANTS, INC.
9101 Vanguard Drive
Anchorage, Alaska 99507
rmconsult.com• email@rmconsult.com
phone: 907.522.1707 • fax: 907.522.3403

Haines Borough
LUTAK DOCK STUDY

No.	Description	Date

Drawn By: PMH
Checked By: JD/DA
Date: DEC 15, 2016
Phase: PRELIMINARY
Project No: 2443.01
SHEET TITLE: EXISTING WHARF DETAILS
SHEET NO: 5 OF 25
G4.1

Z:\project\2443.01 Hb Haines Lutak Dock Study\Civil\ACAD\2443.01 – G4.1 Existing Wharf Details.dwg
Plotted 12/13/2016 4:40 PM by Mike Adams

ALTERNATIVE 1A - MODIFIED DIAPHRAGM

COST ESTIMATE:

NO.	PAY ITEM DESCRIPTION	UNIT	QUANTITY	UNIT PRICE	AMOUNT
1	Mob and Demob	LS	1	$3,000,000	$3,000,000
2	Construction Survey	LS	1	$180,000	$180,000
3	Protected Species Observer	LS	1	$120,000	$120,000
4	Erosion and Pollution Control	LS	1	$31,250	$31,250
5	Silt Curtain - Boom	LS	1	$120,000	$120,000
6	Demolition of Pile Caps and Misc Structure	LF	770	$510	$392,700
7	Demolition of Dolphins and Existing Structure	LS	1	$50,000	$50,000
8	Demolition Closure Arcs	EA	11	$25,000	$275,000
9	Salvage Existing Fenders	EA	10	$2,000	$20,000
10	Salvage Existing Fender Piles	EA	20	$2,500	$50,000
11	Excavation and Disposal of Existing Fill	CY	72,157	$15	$1,082,352
12	Dredging and Disposal	CY	34,369	$24	$824,900
	Sub Total Demolition				**$2,694,952**
13	Furnish PS-31 Sheet Piling	SF	221,228	$34	$7,521,752
14	Install PS-31 Sheet Piling, per pair	EA	800	$2,500	$2,000,000
15	Furnish and Install Porous Backfill	CY	20,473	$40	$818,914
16	Furnish and Install Select Material Type A	CY	44,285	$20	$885,691
17	Furnish and Install Subbase Grading Type B	CY	7,049	$25	$176,218
18	Furnish and Install Leveling Course D-1	CY	1,177	$40	$47,085
19	Furnish 16 inch Diameter Face Beam Piling	LF	2,201	$91	$200,291
20	Install 16 inch Diameter Face Beam Piling	EA	31	$3,900	$120,900

NO.	PAY ITEM DESCRIPTION	UNIT	QUANTITY	UNIT PRICE	AMOUNT
21	Furnish 18 inch Diameter Piling	LF	1,123	$128	$143,744
22	Install 18 inch Diameter Face Beam Piling	EA	11	$4,000	$44,000
23	Install 18 inch Diameter Piling in Rock Socket	EA	6	$20,000	$120,000
24	Furnish and Install Face Beam and Bullrail	CY	1,121	$2,000	$2,242,814
25	Install Salvaged Fenders	EA	10	$6,000	$60,000
26	Install Salvaged Fender Piles	EA	20	$2,500	$50,000
27	Furnish and Install Bollards	EA	11	$10,000	$110,000
28	Furnish and Install Life Rings	EA	5	$1,200	$6,000
29	Furnish and Install Fire Extinguishers	EA	5	$1,200	$6,000
30	Furnish and Install Fire Standpipe	LF	1,000	$120	$120,000
31	Furnish and Install 150# Anodes	EA	634	$1,200	$760,800
32	Furnish 30 inch Diameter Piling	LF	880	$258	$227,040
33	Install 30 inch Diameter Piling in Rock Socket	EA	17	$25,000	$425,000
34	Furnish and Install Tension Anchor	EA	23	$35,000	$805,000
35	Furnish and Install Abutment Pile Cap	LS	1	$30,000	$30,000
36	Furnish and Install Barge Transfer Bridge	LS	1	$1,120,000	$1,120,000
37	Furnish and Install 3 Pile Dolphins	EA	3	$140,000	$420,000
38	Furnish and Install 4 Pile Dolphins	EA	2	$210,000	$420,000
39	Electrical and Lighting	LS	1	$315,600	$315,600
	Sub Total Construction				**$25,343,051**
A	Design Upland Survey	LS	1	$55,000	$55,000

NO.	PAY ITEM DESCRIPTION	UNIT	QUANTITY	UNIT PRICE	AMOUNT
B	Design Hydrographic Survey	LS	1	$20,000	$20,000
C	Design Geotech Program	LS	1	$140,000	$140,000
D	Design (10% of construction)	LS	1	$2,534,305	$2,534,305
E	Permitting Clean Water Act Section 10 and 404	LS	1	$20,000	$20,000
F	Permitting NMFS IHA	LS	1	$80,000	$80,000
G	Permitting NEPA	LS	1	$100,000	$100,000
H	Construction Administration (6% of construction)	LS	1	$1,520,583	$1,520,583
	Sub Total Engineering and Admin				**$4,469,888**
				Total Construction & Engineering Cost:	$29,812,939
				25% Contingency:	$7,453,235
				Total:	$37,300,000

PROGRESS SET NOT FOR CONSTRUCTION

R&M CONSULTANTS, INC.
9101 Vanguard Drive
Anchorage, Alaska 99507
rmconsult.com• email@rmconsult.com
phone: 907.522.1707 • fax: 907.522.3403

Haines Borough
LUTAK DOCK STUDY

No.	Description	Date

Drawn By: PMH
Checked By: JD/DA
Date: DEC 15, 2016
Phase: PRELIMINARY
Project No: 2443.01
SHEET TITLE: ALTERNATIVE 1A MODIFIED DIAPHRAGM
SHEET NO: 6 OF 25
C1.0

Plotted 12/13/2016 4:40 PM by Mike Adams Z:\project\2443.01 Hb Haines Lutak Dock Study\Civil\ACAD\2443.01 – C1.0 Alternative 1A And 1B Description.dwg

ALTERNATIVE 1B - MODIFIED DIAPHRAGM

COST ESTIMATE:

NO.	PAY ITEM DESCRIPTION	UNIT	QUANTITY	UNIT PRICE	AMOUNT
1	Mob and Demob	LS	1	$3,000,000	$3,000,000
2	Construction Survey	LS	1	$180,000	$180,000
3	Protected Species Observer	LS	1	$120,000	$120,000
4	Erosion and Pollution Control	LS	1	$31,250	$31,250
5	Silt Curtain - Boom	LS	1	$120,000	$120,000
6	Demolition of Pile Caps and Misc Structure	LF	770	$510	$392,700
7	Demolition of Dolphins and Existing Structure	LS	1	$50,000	$50,000
8	Demolition Closure Arcs	EA	8	$25,000	$200,000
9	Salvage Existing Fenders	EA	10	$2,000	$20,000
10	Salvage Existing Fender Piles	EA	20	$2,500	$50,000
11	Excavation and Disposal of Existing Fill	CY	72,157	$15	$1,082,352
12	Dredging and Disposal	CY	34,369	$24	$824,900
	Sub Total Demolition				**$2,619,952**
13	Furnish PS-31 Sheet Piling	SF	165,544	$34	$5,628,497
14	Install PS-31 Sheet Piling, per pair	EA	600	$2,500	$1,500,000
15	Furnish and Install Porous Backfill	CY	15,106	$40	$604,242
16	Furnish and Install Select Material Type A	CY	40,295	$20	$805,892
17	Furnish and Install Subbase Grading Type B	CY	5,035	$25	$125,870
18	Furnish and Install Leveling Course D-1	CY	841	$40	$33,632
19	Furnish 16 inch Diameter Face Beam Piling	LF	1,633	$91	$148,603
20	Install 16 inch Diameter Face Beam Piling	EA	23	$3,900	$89,700

NO.	PAY ITEM DESCRIPTION	UNIT	QUANTITY	UNIT PRICE	AMOUNT
21	Furnish 18 inch Diameter Piling	LF	584	$128	$74,752
22	Install 18 inch Diameter Face Beam Piling	EA	8	$4,000	$32,000
23	Install 18 inch Diameter Piling in Rock Socket	EA	6	$20,000	$120,000
24	Furnish and Install Face Beam and Bullrail	CY	802	$2,000	$1,604,973
25	Install Salvaged Fenders	EA	8	$6,000	$48,000
26	Install Salvaged Fender Piles	EA	16	$2,500	$40,000
27	Furnish and Install Bollards	EA	8	$10,000	$80,000
28	Furnish and Install Life Rings	EA	5	$1,200	$6,000
29	Furnish and Install Fire Extinguishers	EA	5	$1,200	$6,000
30	Furnish and Install Fire Standpipe	LF	700	$120	$84,000
31	Furnish and Install 150# Anodes	EA	634	$1,200	$760,800
32	Furnish 30 inch Diameter Piling	LF	880	$258	$227,040
33	Install 30 inch Dimeter Piling in Rock Socket	EA	17	$25,000	$425,000
34	Furnish and Install Tension Anchor	EA	23	$35,000	$805,000
35	Furnish and Install Abutment Pile Cap	LS	1	$30,000	$30,000
36	Furnish and Install Barge Transfer Bridge	LS	1	$1,120,000	$1,120,000
37	Furnish and Install 3 Pile Dolphins	EA	3	$140,000	$420,000
38	Furnish and Install 4 Pile Dolphins	EA	2	$210,000	$420,000
39	Electrical and Lighting	LS	1	$315,600	$315,600
	Sub Total Construction				**$21,626,803**

NO.	PAY ITEM DESCRIPTION	UNIT	QUANTITY	UNIT PRICE	AMOUNT
A	Design Upland Survey	LS	1	$55,000	$55,000
B	Design Hydrographic Survey	LS	1	$20,000	$20,000
C	Design Geotech Program	LS	1	$140,000	$140,000
D	Design (10% of construction)	LS	1	$2,162,680	$2,162,680
E	Permitting Clean Water Act Section 10 and 404	LS	1	$20,000	$20,000
F	Permitting NMFS IHA	LS	1	$80,000	$80,000
G	Permitting NEPA	LS	1	$100,000	$100,000
H	Construction Administration (6% of construction)	LS	1	$1,297,608	$1,297,608
	Sub Total Engineering and Admin				**$3,875,289**
				Total Construction & Engineering Cost:	$25,502,092
				25% Contingency:	$6,375,523
				Total:	$31,900,000

PROGRESS SET NOT FOR CONSTRUCTION

R&M CONSULTANTS, INC.
9101 Vanguard Drive
Anchorage, Alaska 99507
rmconsult.com• email@rmconsult.com
phone: 907.522.1707 • fax: 907.522.3403

Haines Borough
LUTAK DOCK STUDY

No.	Description	Date

Drawn By: PMH
Checked By: JD/DA
Date: DEC 15, 2016
Phase: PRELIMINARY
Project No: 2443.01
SHEET TITLE: ALTERNATIVE 1B MODIFIED DIAPHRAGM
SHEET NO: 7 OF 25
C1.1

Plotted 12/13/2016 4:41 PM by Mike Adams Z:\project\2443.01 Hb Haines Lutak Dock Study\Civil\ACAD\2443.01 – C1.0 Alternative 1A And 1B Description.dwg

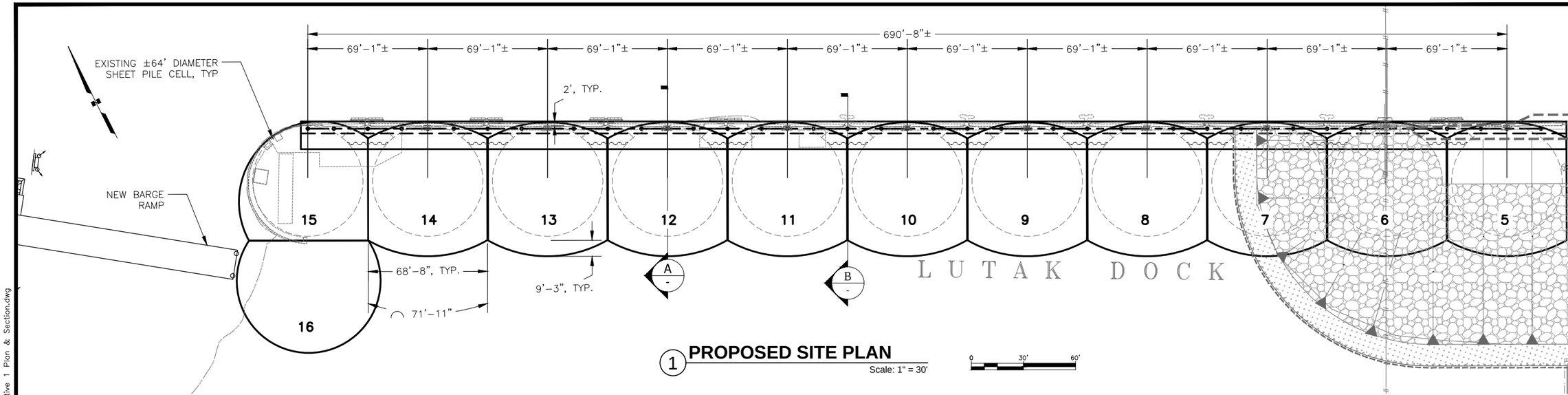

1 PROPOSED SITE PLAN

Scale: 1" = 30'

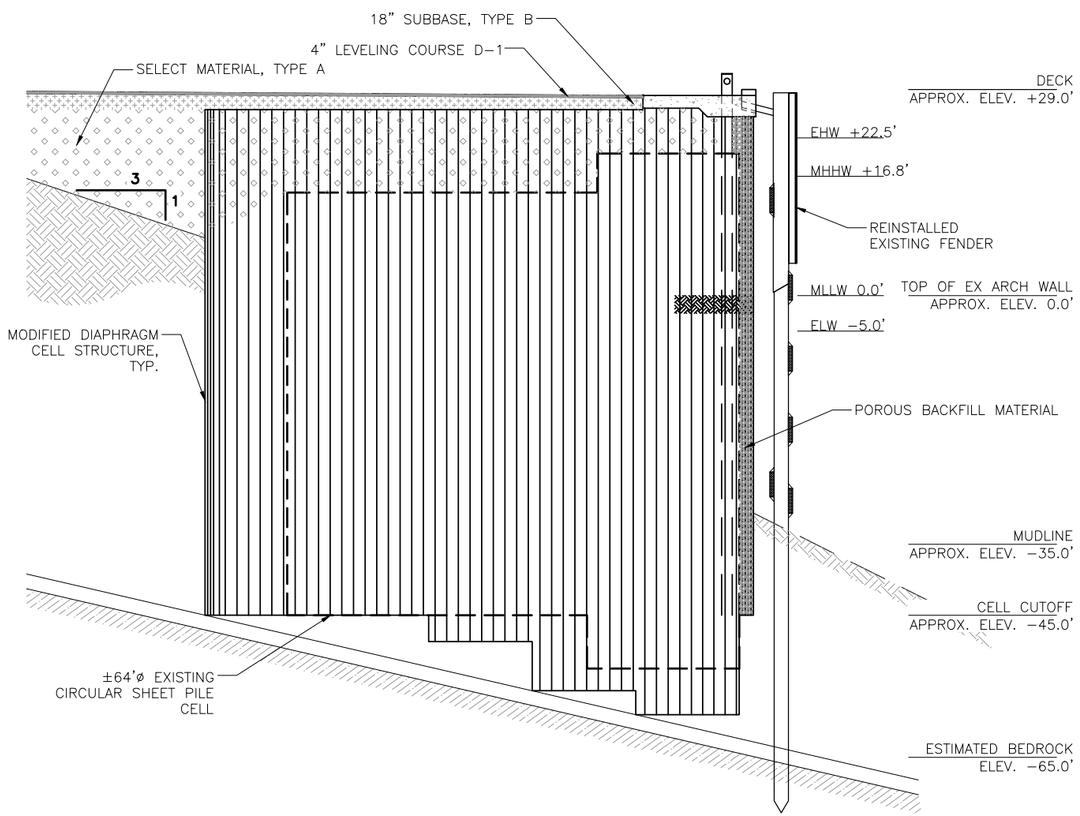

A SECTION AT CENTER OF CELL

Scale: 3/32" = 1'-0"

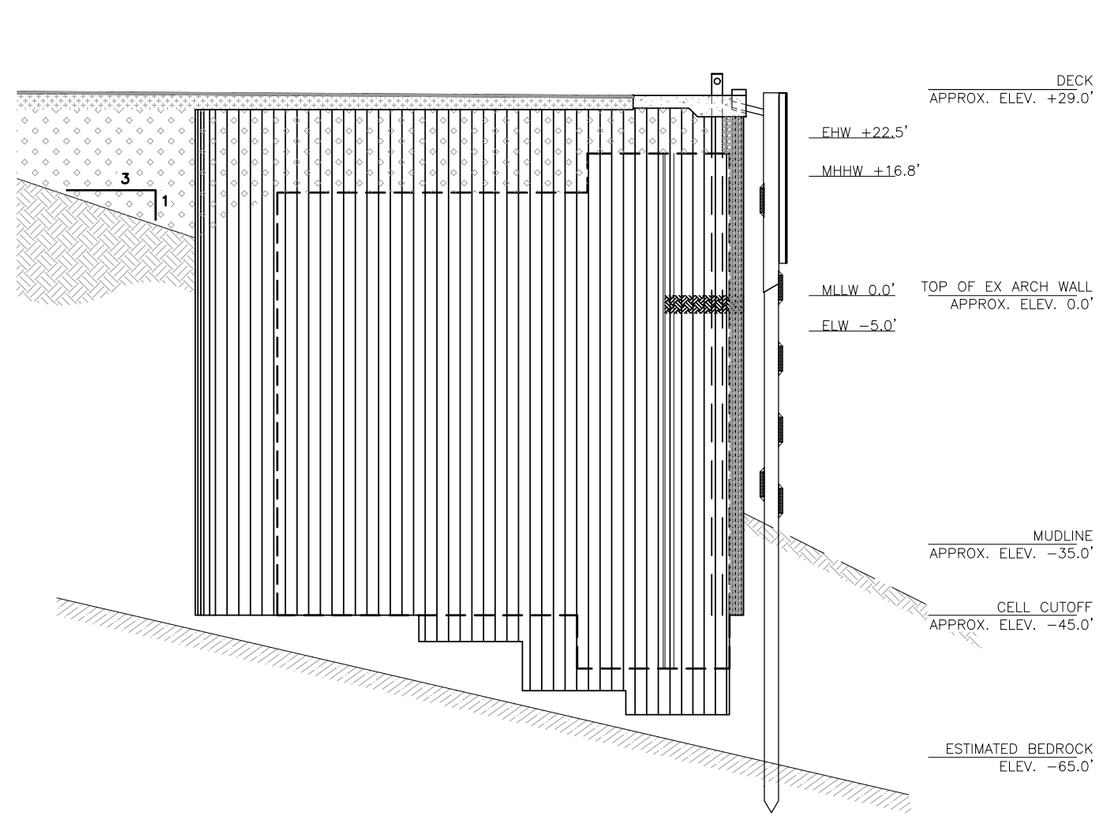

B SECTION AT CLOSURE ARC

Scale: 3/32" = 1'-0"

PROGRESS SET NOT FOR CONSTRUCTION

R&M CONSULTANTS, INC.
9101 Vanguard Drive
Anchorage, Alaska 99507
rmconsult.com• email@rmconsult.com
phone: 907.522.1707 • fax: 907.522.3403

Haines Borough

LUTAK DOCK STUDY

No.	Description	Date

Drawn By: PMH
Checked By: JD/DA
Date: DEC 15, 2016
Phase: PRELIMINARY
Project No: 2443.01
SHEET TITLE: ALTERNATIVE 1A PLAN AND SECTIONS
SHEET NO: 8 OF 25
C1.2

Z:\project\2443.01 Hb Haines Lutak Dock Study\Civil\ACAD\2443.01 – C1.2 Alternative 1 Plan & Section.dwg
Plotted 12/13/2016 4:41 PM by Mike Adams

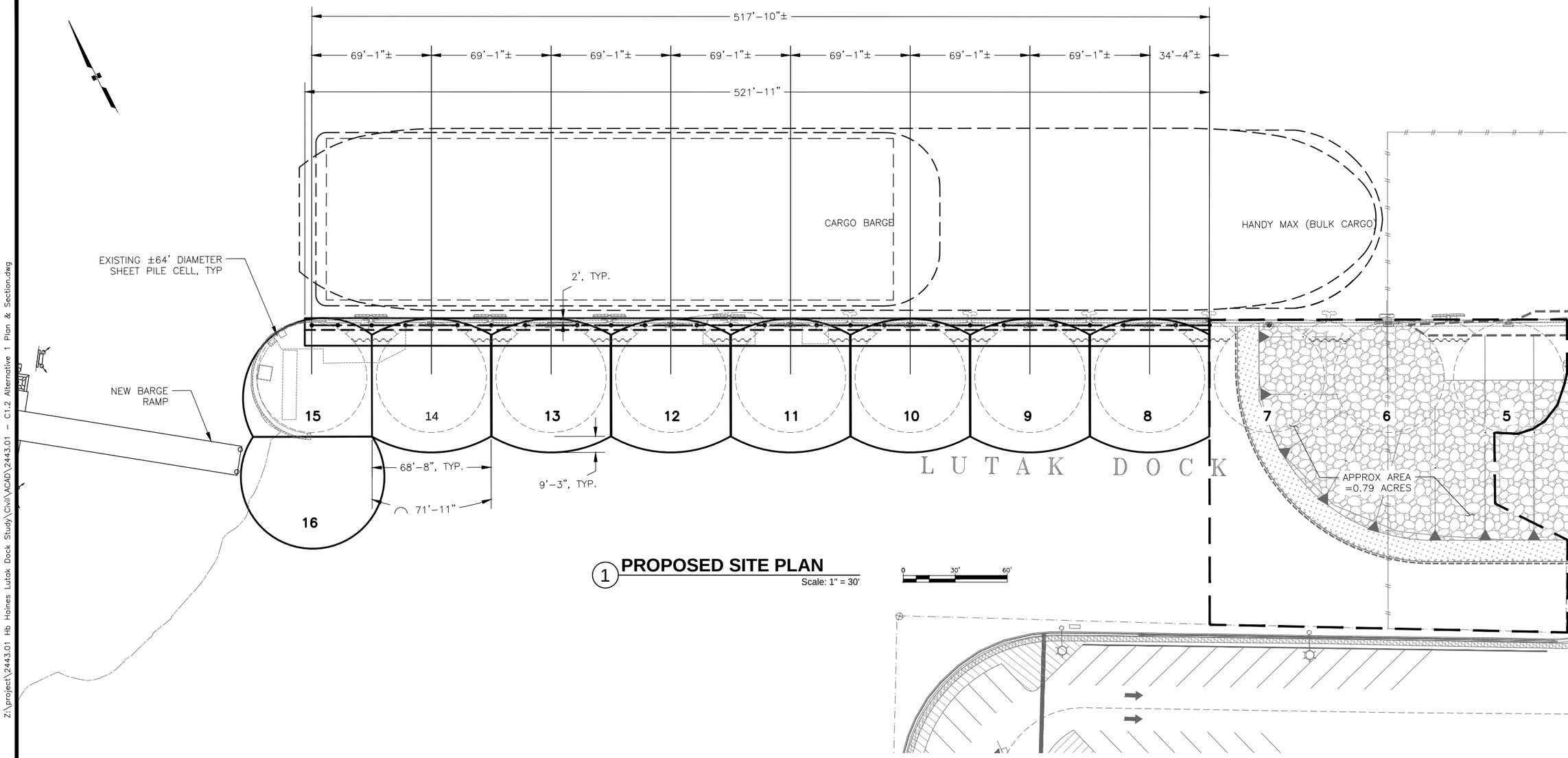

1 **PROPOSED SITE PLAN**

Scale: 1" = 30'

PROGRESS SET NOT FOR CONSTRUCTION

R&M CONSULTANTS, INC.
9101 Vanguard Drive
Anchorage, Alaska 99507
rmconsult.com• email@rmconsult.com
phone: 907.522.1707 • fax: 907.522.3403

Haines Borough

LUTAK DOCK STUDY

No.	Description	Date

Drawn By: PMH
Checked By: JD/DA
Date: DEC 15, 2016
Phase: PRELIMINARY
Project No: 2443.01
SHEET TITLE: ALTERNATIVE 1B PLAN
SHEET NO: 9 OF 25

C1.3

Z:\project\2443.01 Hb Haines Lutak Dock Study\Civil\ACAD\2443.01 - C1.2 Alternative 1 Plan & Section.dwg
Plotted 12/13/2016 4:41 PM by Mike Adams

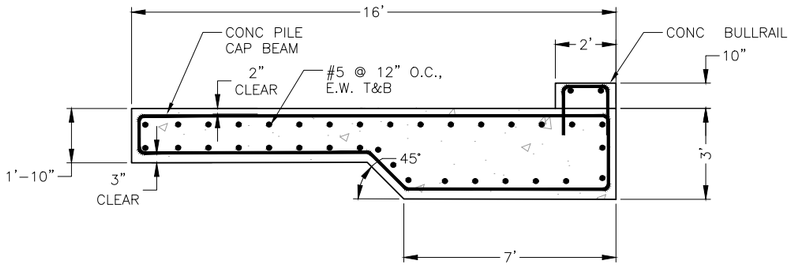

1 **PILE CAP REBAR DETAIL**
Scale: 1" = 30'

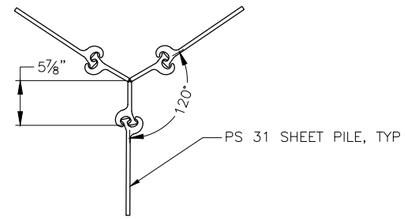

2 **DIAPHRAGM CELL CONNECTION**
Scale: 1" = 10'

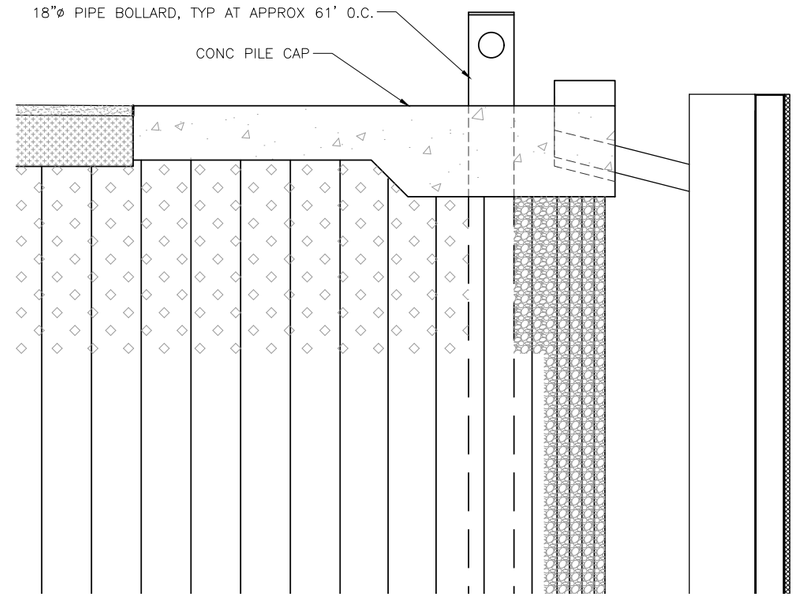

3 **BOLLARD THROUGH PILE CAP**
Scale: 1" = 30'

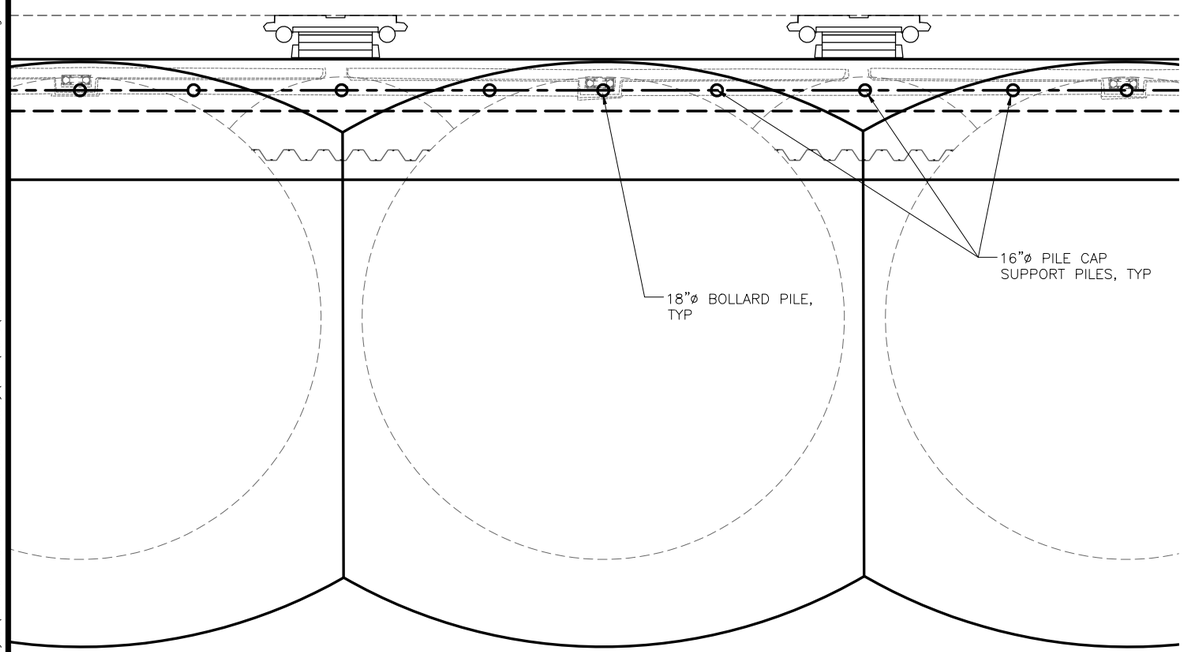

4 **PILE CAP PLAN**
Scale: 1" = 10'

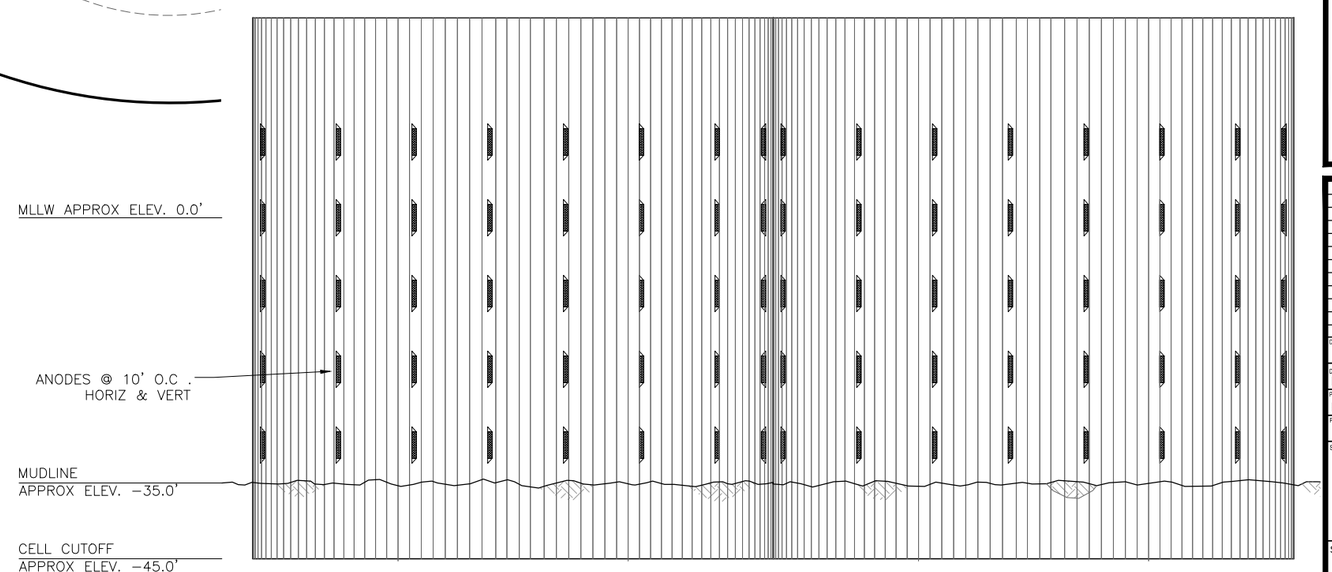

5 **ANODE DETAIL - TYPICAL SHEET PILE**
Scale: 1" = 10'

PROGRESS SET
NOT FOR
CONSTRUCTION

R&M CONSULTANTS, INC.
9101 Vanguard Drive
Anchorage, Alaska 99507
rmconsult.com• email@rmconsult.com
phone: 907.522.1707 • fax: 907.522.3403

Haines Borough
LUTAK DOCK STUDY

No.	Description	Date

Drawn By: PMH
Checked By: JD/DA
Date: DEC 15, 2016
Phase: PRELIMINARY
Project No: 2443.01
SHEET TITLE: DETAILS

SHEET NO: 10 OF 25
C1.4

Plotted 12/13/2016 4:41 PM by Mike Adams Z:\project\2443.01 Hb Haines Lutak Dock Study\Civil\ACAD\2443.01 – C1.2 Alternative 1 Plan & Section.dwg

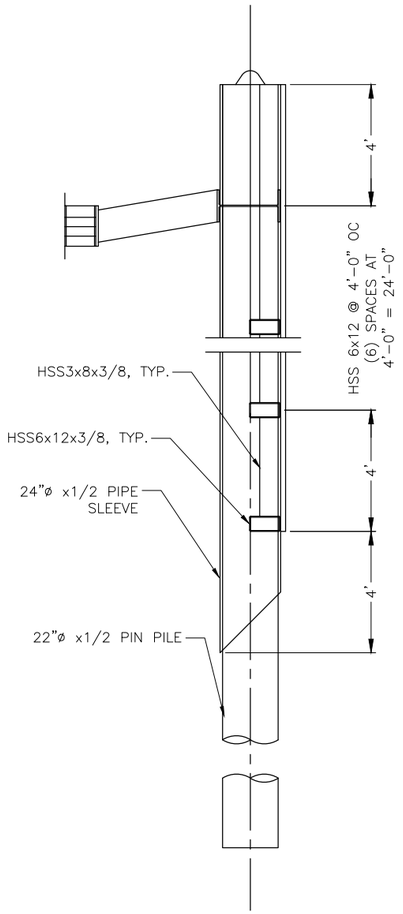

1 **EXISTING FENDER SECTION**

Scale: 1" = 30'

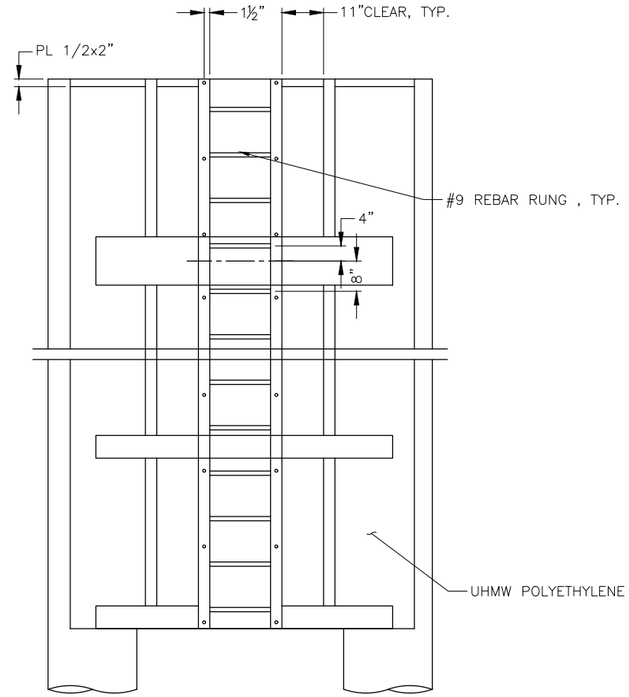

2 **FENDER FACE ELEVATION**

Scale: 1" = 20'

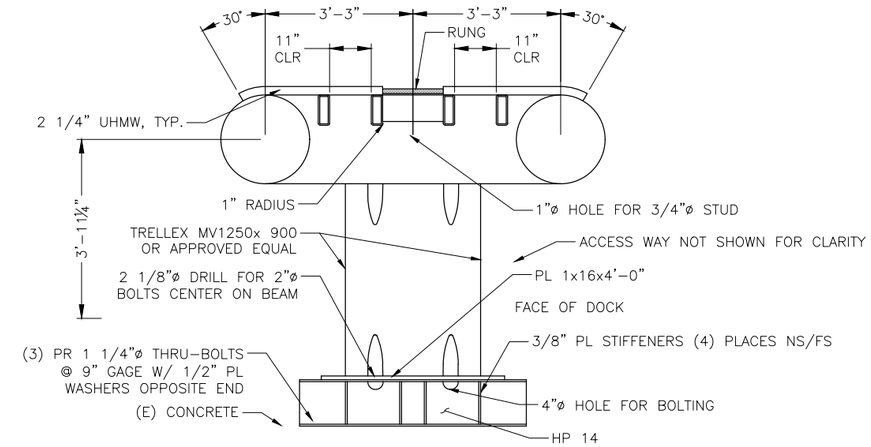

3 **FENDER PLAN**

Scale: 1" = 20'

PROGRESS SET NOT FOR CONSTRUCTION

R&M CONSULTANTS, INC.
9101 Vanguard Drive
Anchorage, Alaska 99507
rmconsult.com• email@rmconsult.com
phone: 907.522.1707 • fax: 907.522.3403

Haines Borough

LUTAK DOCK STUDY

No.	Description	Date

Drawn By: PMH
Checked By: JD/DA
Date: DEC 15, 2016
Phase: PRELIMINARY
Project No: 2443.01
SHEET TITLE: ALTERNATIVE 1 FENDER DETAILS
SHEET NO: 11 OF 25

C1.5

Z:\project\2443.01 Hb Haines Lutak Dock Study\Civil\ACAD\2443.01 – C1.2 Alternative 1 Plan & Section.dwg
Plotted 12/13/2016 4:41 PM by Mike Adams

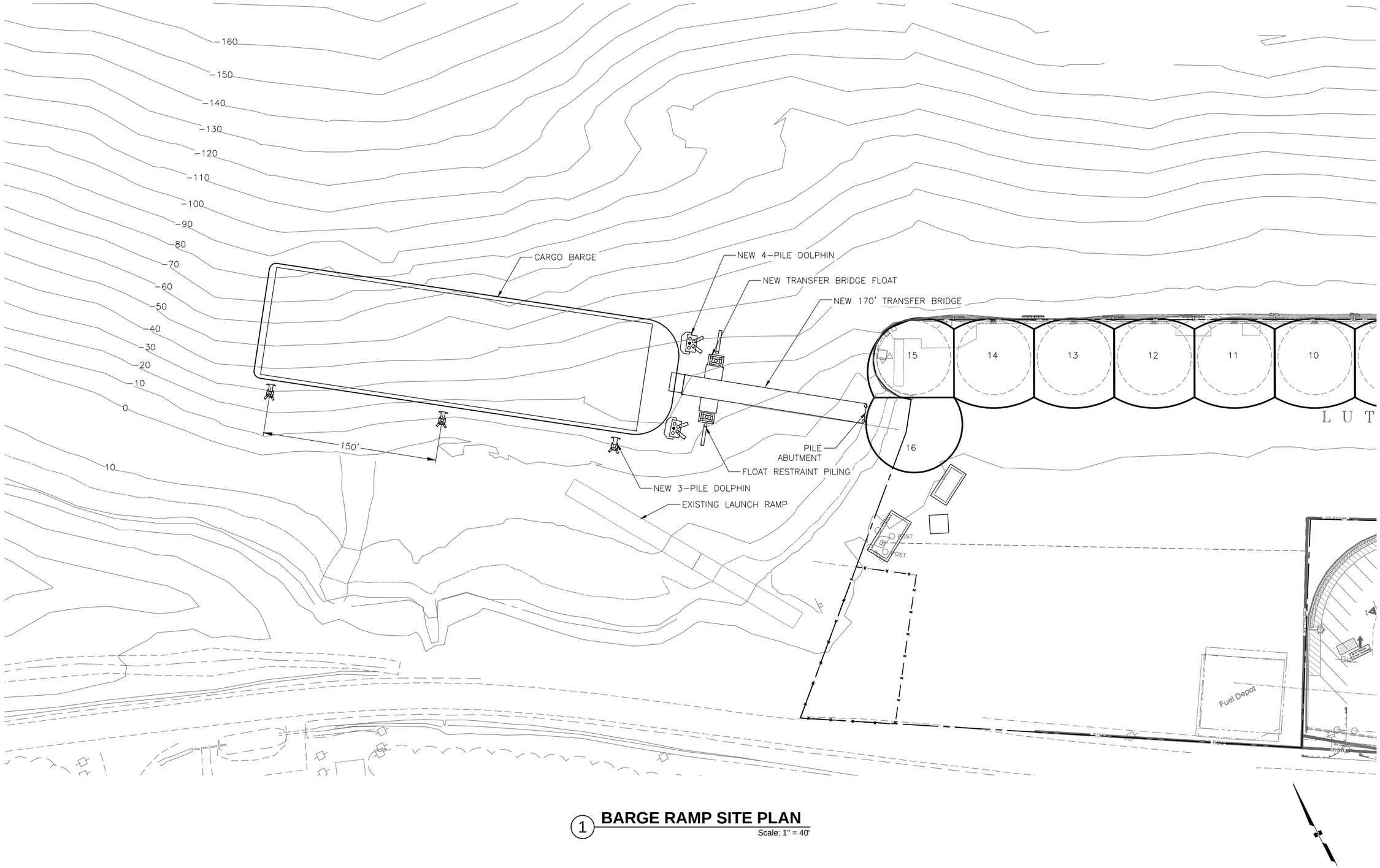

1 **BARGE RAMP SITE PLAN**

Scale: 1" = 40'

PROGRESS SET NOT FOR CONSTRUCTION

R&M CONSULTANTS, INC.
9101 Vanguard Drive
Anchorage, Alaska 99507
rmconsult.com• email@rmconsult.com
phone: 907.522.1707 • fax: 907.522.3403

Haines Borough

LUTAK DOCK STUDY

No.	Description	Date

Drawn By: PMH
Checked By: JD/DA
Date: DEC 15, 2016
Phase: PRELIMINARY
Project No: 2443.01
SHEET TITLE: BARGE RAMP SITE PLAN
SHEET NO: 12 OF 25
C1.6

Z:\project\2443.01 Hb Haines Lutak Dock Study\Civil\ACAD\2443.01 – C1.6 – Barge Ramp Site Plan.dwg
Plotted 12/13/2016 4:42 PM by Mike Adams

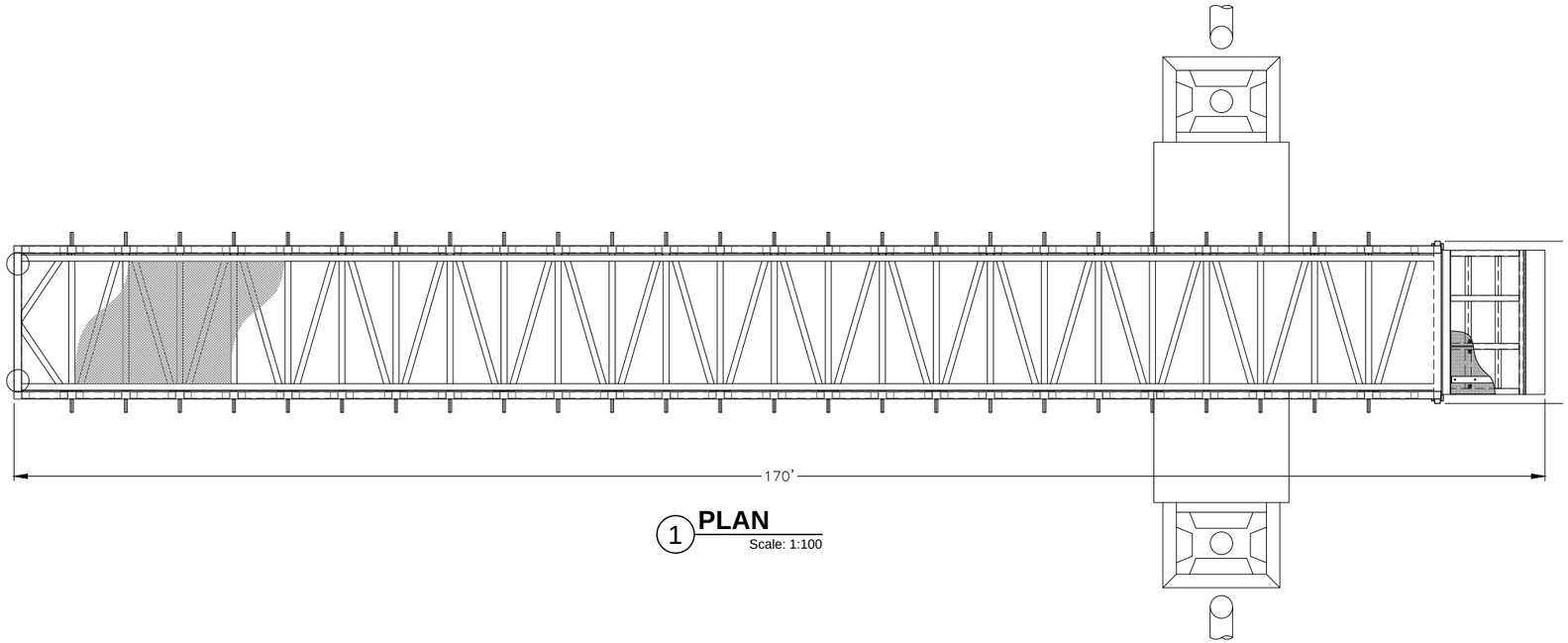

1 **PLAN**
Scale: 1:100

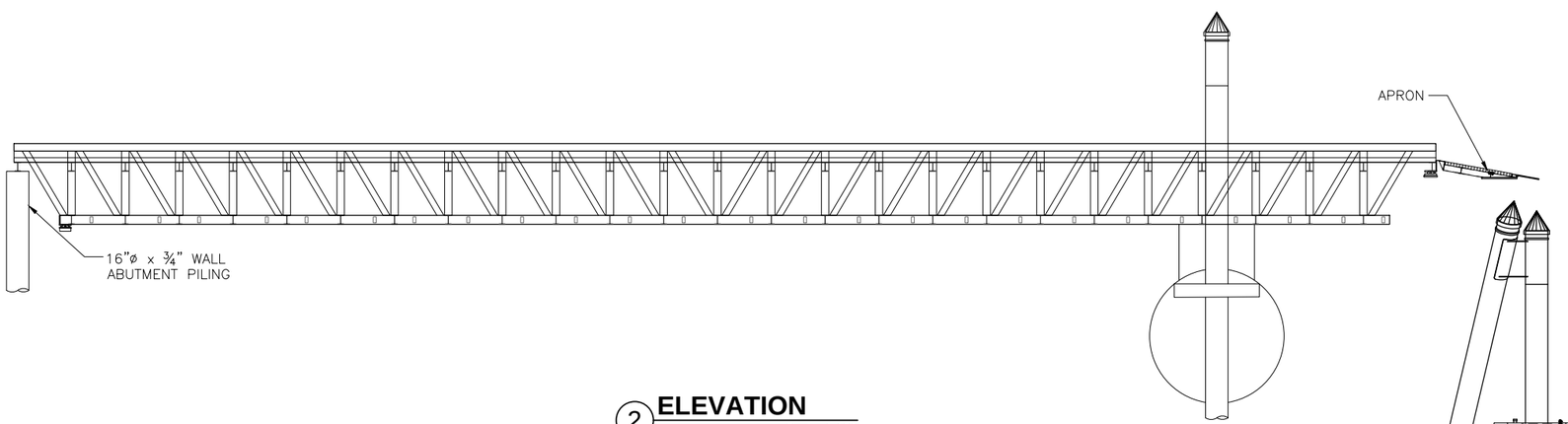

2 **ELEVATION**
Scale: 1:100

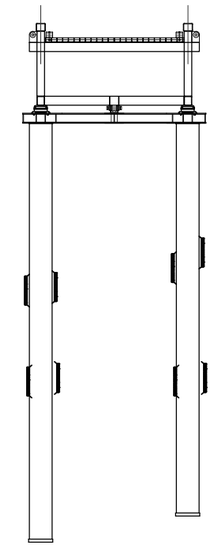

3 **ABUTMENT ELEVATION**
Scale: 1:100

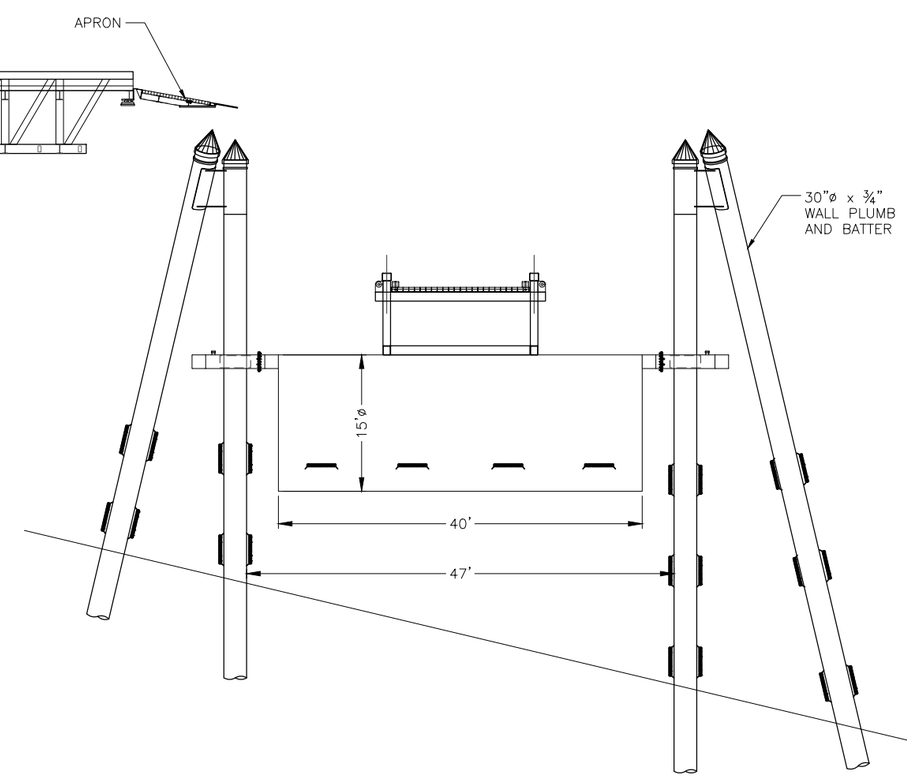

4 **OFFSHORE END ELEVATION**
Scale: 1:100

PROGRESS SET
NOT FOR
CONSTRUCTION

R&M CONSULTANTS, INC.
9101 Vanguard Drive
Anchorage, Alaska 99507
rmconsult.com• email@rmconsult.com
phone: 907.522.1707 • fax: 907.522.3403

Haines Borough
LUTAK DOCK STUDY

HAINES BOROUGH ALASKA

No.	Description	Date

Drawn By: PMH
Checked By: JD/DA
Date: DEC 15, 2016
Phase: PRELIMINARY
Project No: 2443.01
SHEET TITLE:
DECK TRUSS AND TRANSFER BRIDGE

SHEET NO:
13 OF 25

C1.7

Z:\project\2443.01 Hb Haines Lutak Dock Study\Civil\ACAD\2443.01 – C1.7 – Barge Ramp Details.dwg
Plotted 12/13/2016 4:43 PM by Mike Adams

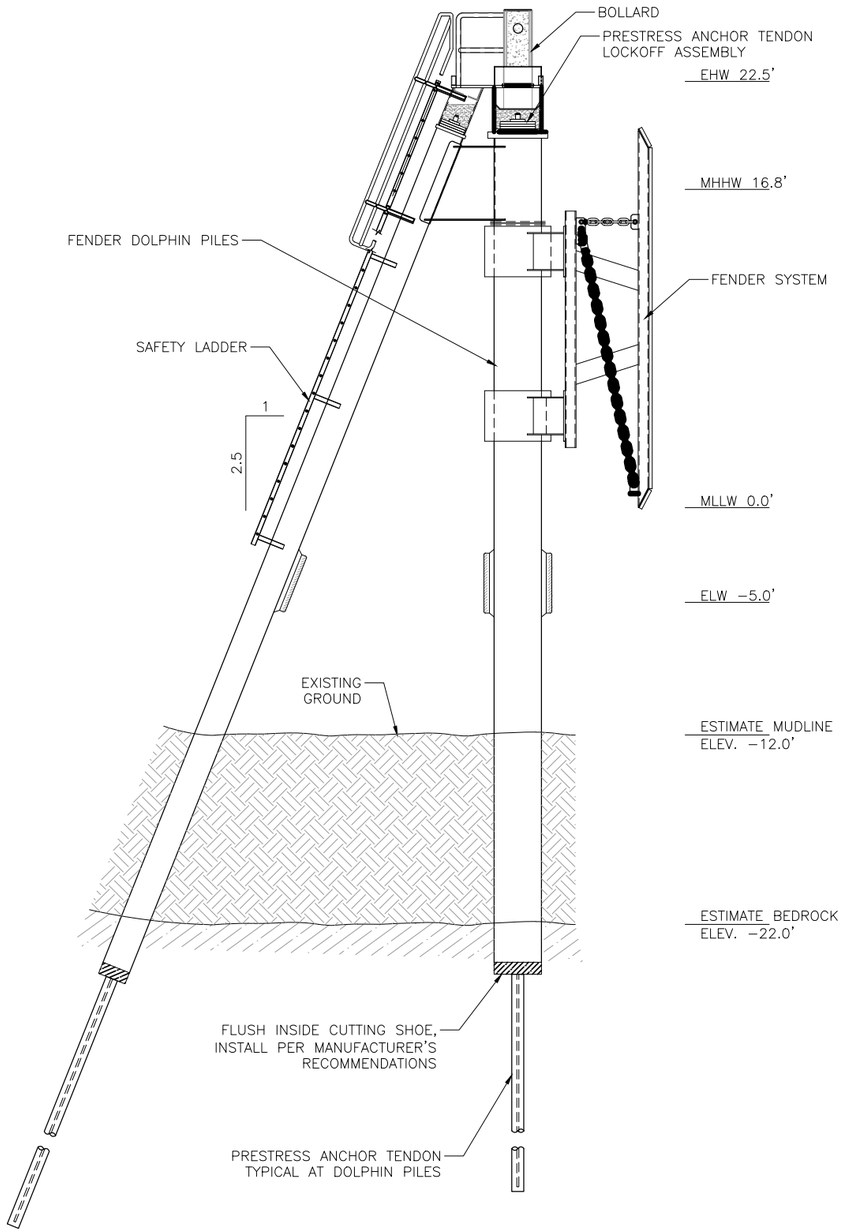

1 **3 PILE DOLPHIN ELEVATION**

Scale: 1/4" = 1'-0"

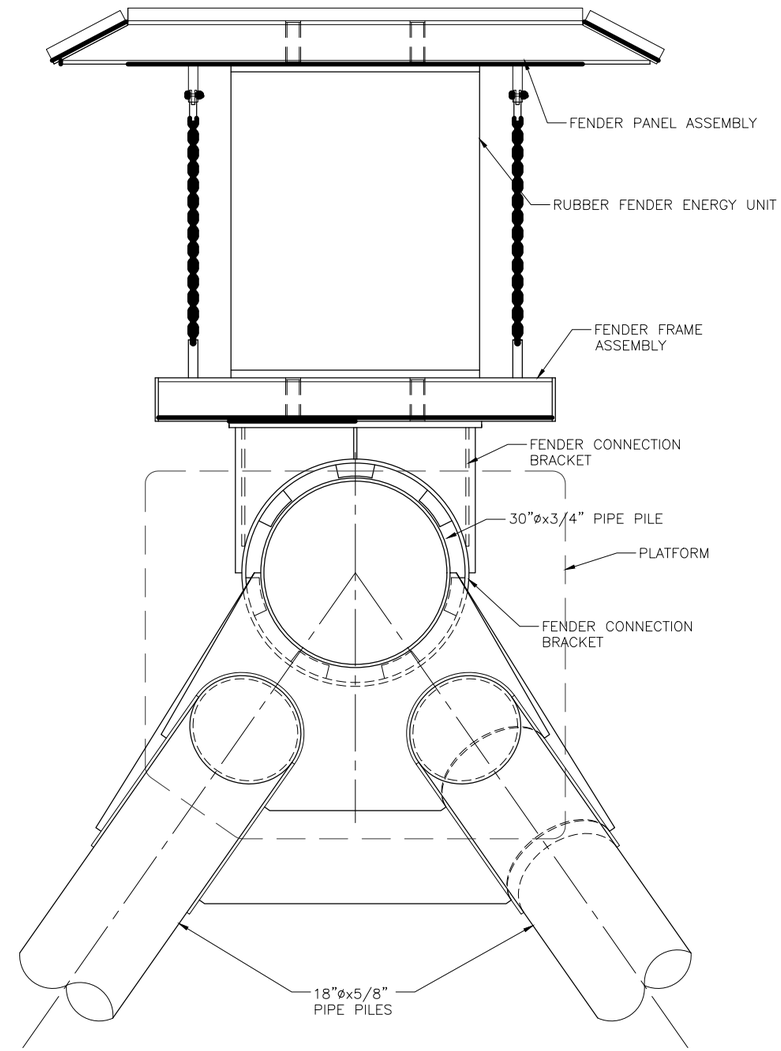

2 **3 PILE DOLPHIN PLAN**

Scale: 1" = 1'-0"

PROGRESS SET NOT FOR CONSTRUCTION

R&M CONSULTANTS, INC.
9101 Vanguard Drive
Anchorage, Alaska 99507
rmconsult.com• email@rmconsult.com
phone: 907.522.1707 • fax: 907.522.3403

Haines Borough

LUTAK DOCK STUDY

No.	Description	Date

Drawn By: PMH
Checked By: JD/DA
Date: DEC 15, 2016
Phase: PRELIMINARY
Project No: 2443.01
SHEET TITLE: 3 PILE DOLPHIN DETAILS
SHEET NO: 14 OF 25

C1.8

Z:\project\2443.01 Hb Haines Lutak Dock Study\Civil\ACAD\2443.01 - C1.8 - 3 Pile Dolphin Plan & Elevation.dwg
Plotted 12/13/2016 4:43 PM by Mike Adams

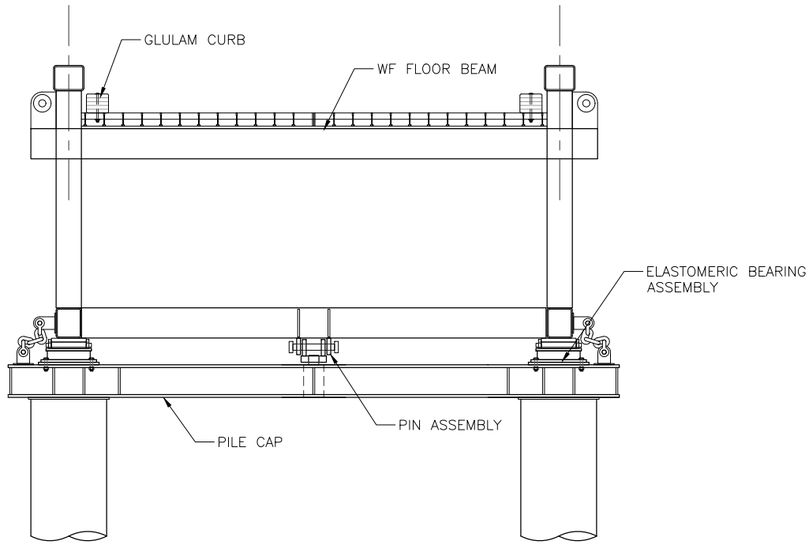

1 **BRIDGE SECTION AT APPROACH**
Scale: 1:30

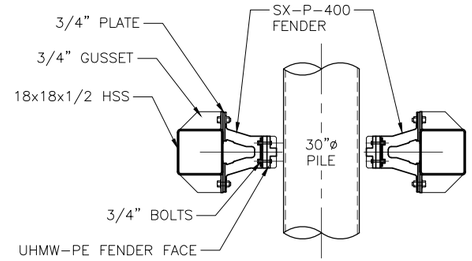

SECTION AT 30" PILE
Scale: 1:30

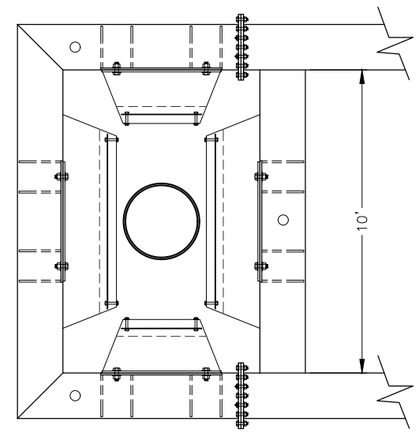

EXTERIOR PILE COLLAR
Scale: 1:30

2 **EXTERIOR PILE COLLAR DETAIL**
Scale: 1:30

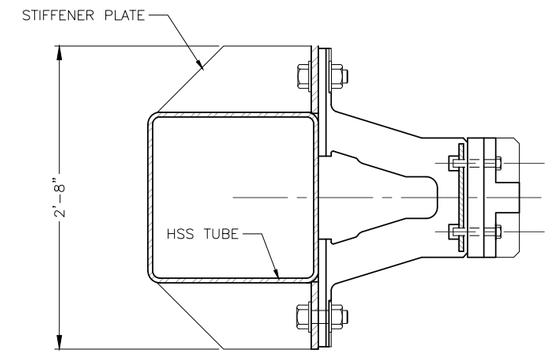

3 **CONNECTION AT SX-P FENDER**
Scale: 1:8

PROGRESS SET NOT FOR CONSTRUCTION

R&M CONSULTANTS, INC.
9101 Vanguard Drive
Anchorage, Alaska 99507
rmconsult.com• email@rmconsult.com
phone: 907.522.1707 • fax: 907.522.3403

Haines Borough
LUTAK DOCK STUDY

No.	Description	Date

Drawn By: PMH
Checked By: JD/DA
Date: DEC 15, 2016
Phase: PRELIMINARY
Project No: 2443.01
SHEET TITLE: ABUTMENT AND PILE COLLAR DETAILS
SHEET NO: 15 OF 25
C1.9

Z:\project\2443.01 Hb Haines Lutak Dock Study\Civil\ACAD\2443.01 – C1.7 – Barge Ramp Details.dwg
Plotted 12/13/2016 4:43 PM by Mike Adams

ALTERNATIVE 2 - PILE SUPPORTED DOCK

COST ESTIMATE:

NO.	PAY ITEM DESCRIPTION	UNIT	QUANTITY	UNIT PRICE	AMOUNT
1	Mob and Demob	LS	1	$3,000,000	$3,000,000
2	Construction Survey	LS	1	$180,000	$180,000
3	Protected Species Observer	LS	1	$120,000	$120,000
4	Erosion and Pollution Control	LS	1	$31,250	$31,250
5	Silt Curtain - Boom	LS	1	$120,000	$120,000
6	Demolition of Pile Caps and Misc Structure	LF	770	$510	$392,700
7	Demolition of Dolphins and Existing Structure	LS	1	$50,000	$50,000
8	Demolition of Sheet Pile Walls	SF	158,714	$3.50	$555,500
9	Salvage Existing Fenders	EA	10	$2,000	$20,000
10	Salvage Existing Fender Piles	EA	20	$2,500	$50,000
11	Excavation and Disposal of Existing Fill	CY	137,259	$15	$2,060,000
12	Dredging and Disposal	CY	34,369	$24	$824,900
	Sub Total Demolition				**$3,953,100**
13	Furnish and Install Select Material Type A	CY	5,157	$20	$103,200
14	Furnish and install Subbase Grading Type B	CY	1,428	$25	$35,700
15	Furnish and Install Leveling Course D-1	CY	333	$40	$13,400
16	Furnish and Install Class I Rip Rap Slope Protection	CY	6,302	$102	$644,000
17	Furnish and Install Class IV Rip Rap Slope Protection	CY	6,954	$109	$761,000
18	Furnish 24" Pipe Piles	LF	40,425	$138	$5,578,650
19	Install 24" Pipe Piles	EA	385	$20,000	$7,700,000
20	Furnish Abutment NZ-19 Sheet Piling	SF	25,410	$36	$914,800

NO.	PAY ITEM DESCRIPTION	UNIT	QUANTITY	UNIT PRICE	AMOUNT
21	Install Abutment NZ-19 Sheet Piling, per pair	EA	330	$2,500	$824,941
22	Furnish and Install Abutment Tie Rods and Waler	EA	127	$2,000	$254,000
23	Furnish and Install Abutment Pile Cap and Grate	LF	770	$1,000	$770,000
24	Furnish and Install Dock Pile Caps	CY	1,283	$2,000	$2,566,667
25	Furnish and Install Deck Panels	SF	71,225	$107	$7,638,881
26	Furnish and Install Face Beam - Bullrail	CY	445	$2,000	$890,900
27	Furnish and Install Cleats	EA	8	$5,000	$40,000
28	Furnish and Install Bollards	EA	4	$10,000	$40,000
29	Install Salvaged Fenders	EA	10	$6,000	$60,000
30	Install Salvaged Fender Piles	EA	20	$2,500	$50,000
31	Furnish and Install Life Rings	EA	5	$1,200	$6,000
32	Furnish and Install Fire Extinguishers	EA	5	$1,200	$6,000
33	Furnish and Install Fire Standpipe	LF	1,000	$120	$120,000
34	Furnish and Install 150# Anodes	EA	1,159	$1,200	$1,390,800
35	Furnish 18 inch Diameter Piling	LF	320	$128	$40,960
36	Install 18 inch Diameter Piling in Rock Socket	EA	6	$20,000	$120,000
37	Furnish 30 inch Diameter Piling	LF	880	$258	$227,040
38	Install 30 inch Diameter Piling in Rock Socket	EA	17	$25,000	$425,000
39	Furnish and Install Tension Anchor	EA	23	$35,000	$805,000
40	Furnish and Install Abutment Pile Cap and Grate	LS	1	$30,000	$30,000
41	Furnish and Install Barge Transfer Bridge	LS	1	$1,120,000	$1,120,000
42	Furnish and Install 3 Pile Dolphins	EA	3	$140,000	$420,000

NO.	PAY ITEM DESCRIPTION	UNIT	QUANTITY	UNIT PRICE	AMOUNT
43	Furnish and Install 4 Pile Dolphins	EA	2	$210,000	$420,000
44	Electrical and Lighting	LS	1	$315,600	$315,600
	Sub Total Construction				**$41,736,888.99**
A	Design Upland Survey	LS	1	$55,000	$55,000
B	Design Hydrographic Survey	LS	1	$20,000	$20,000
C	Design Geotech Program	LS	1	$140,000	$140,000
D	Design (10% of construction)	LS	1	$4,173,689	$4,173,689
E	Permitting Clean Water Act Section 10 and 404	LS	1	$20,000	$20,000
F	Permitting NMFS IHA	LS	1	$80,000	$80,000
G	Permitting NEPA	LS	1	$100,000	$100,000
H	Construction Administration (6% of construction)	LS	1	$2,504,213	$2,504,213
	Sub Total Engineering and Admin				**$7,092,902**
				Total Construction & Engineering Cost:	$48,829,791
				25% Contingency:	$12,207,448
				Total:	$61,000,000

PROGRESS SET NOT FOR CONSTRUCTION

R&M CONSULTANTS, INC.
9101 Vanguard Drive
Anchorage, Alaska 99507
rmconsult.com• email@rmconsult.com
phone: 907.522.1707 • fax: 907.522.3403

Haines Borough
LUTAK DOCK STUDY

No.	Description	Date

Drawn By: PMH
Checked By: JD/DA
Date: DEC 15, 2016
Phase: PRELIMINARY
Project No: 2443.01
SHEET TITLE: ALTERNATIVE 2 PILE SUPPORTED DOCK
SHEET NO: 16 OF 25
C2.0

Plotted 12/13/2016 4:44 PM by Mike Adams Z:\project\2443.01 Hb Haines Lutak Dock Study\Civil\ACAD\2443.01 – C2.0 Alternative 2 Description.dwg

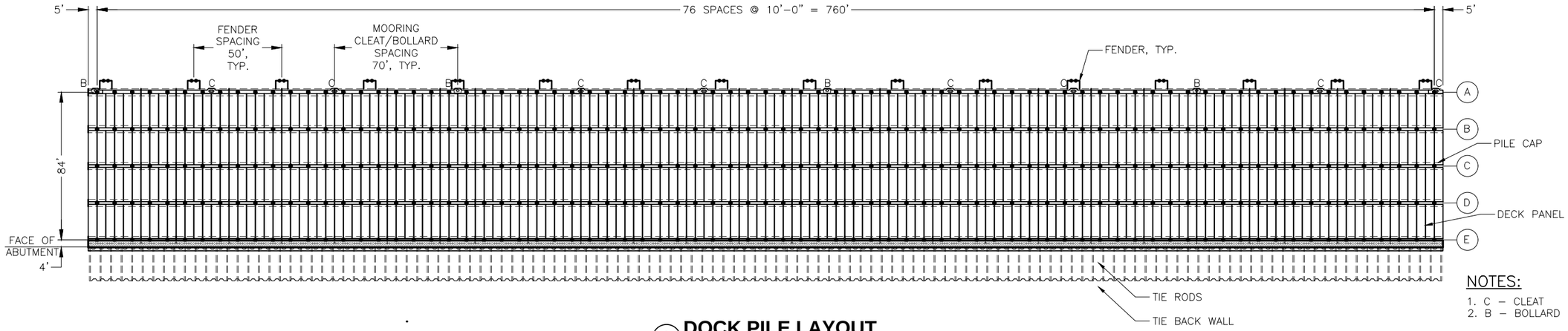

NOTES:

1. C – CLEAT
2. B – BOLLARD

1 DOCK PILE LAYOUT

Scale: 1/32" = 1'-0"

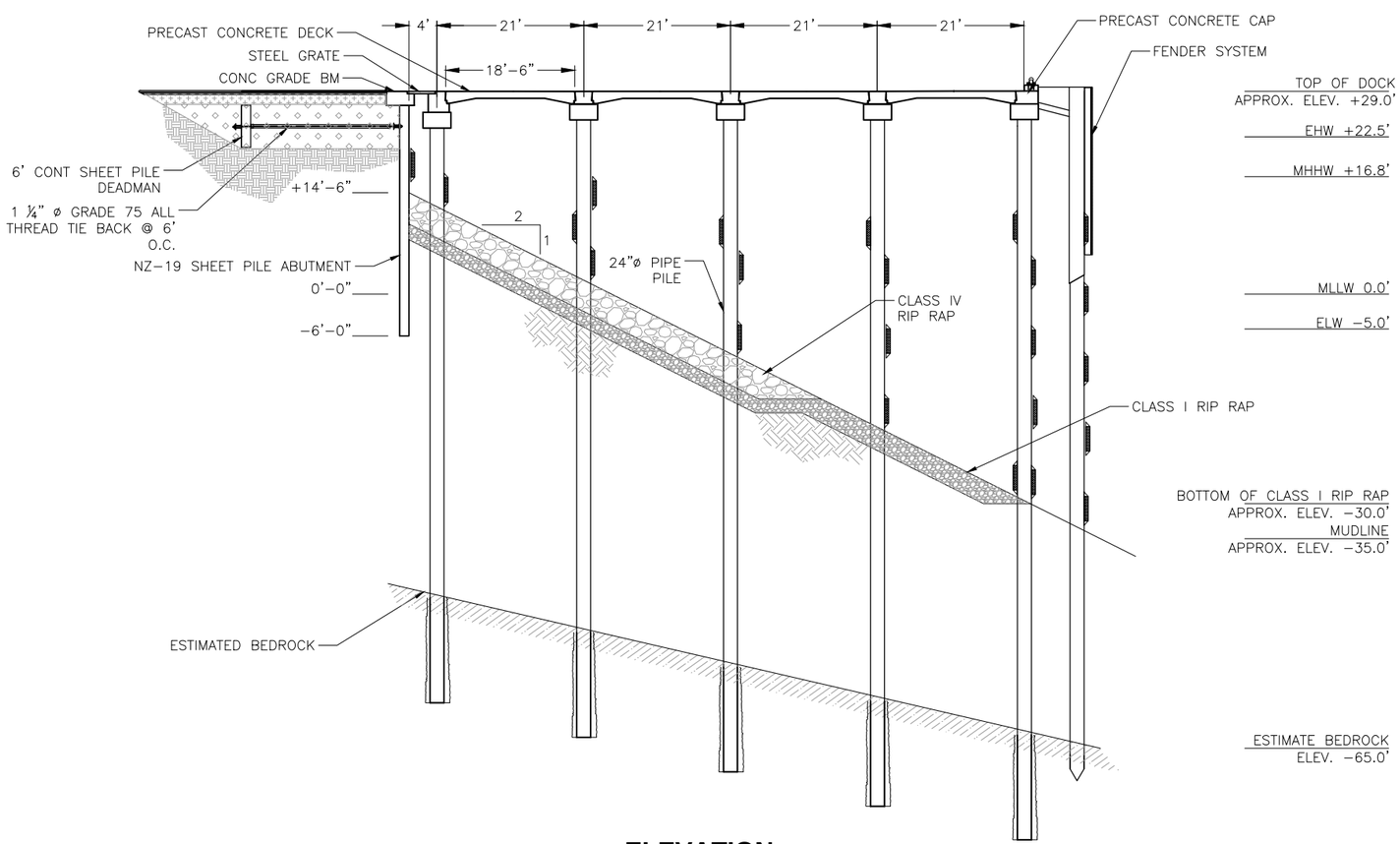

2 ELEVATION

Scale: 3/32" = 1'-0"

PROGRESS SET NOT FOR CONSTRUCTION

R&M CONSULTANTS, INC.
9101 Vanguard Drive
Anchorage, Alaska 99507
rmconsult.com• email@rmconsult.com
phone: 907.522.1707 • fax: 907.522.3403

Haines Borough

LUTAK DOCK STUDY

No.	Description	Date

Drawn By: PMH
Checked By: JD/DA
Date: DEC 15, 2016
Phase: PRELIMINARY
Project No: 2443.01
SHEET TITLE: ALTERNATIVE 2 PILE DOCK PLAN AND ELEVATION
SHEET NO: 17 OF 25

C2.1

Z:\project\2443.01 Hb Haines Lutak Dock Study\Civil\ACAD\2443.01 – C2.1 Alternative 2 Pile Dock Plan & Elevation.dwg
Plotted 12/13/2016 4:44 PM by Mike Adams

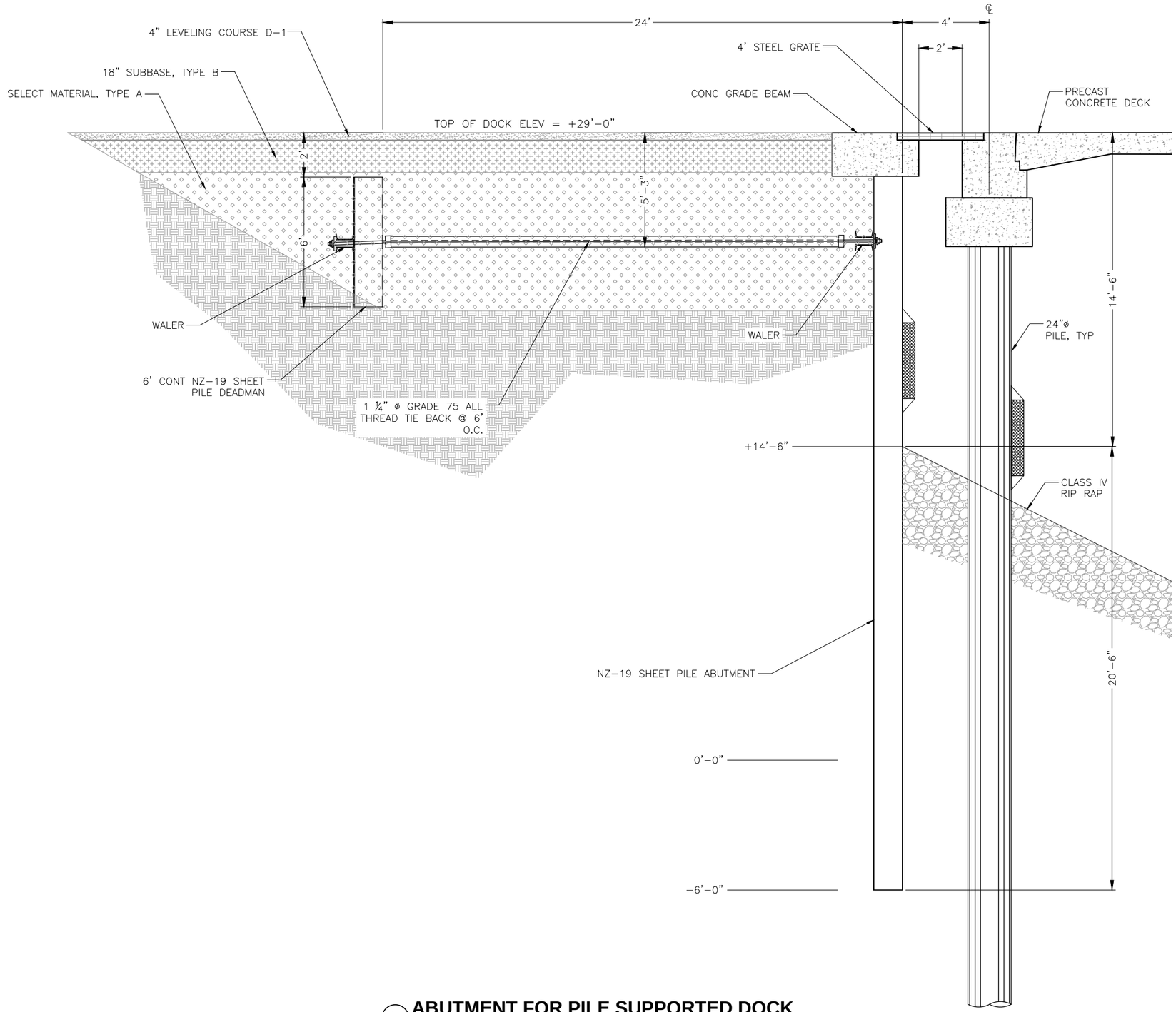

1 **ABUTMENT FOR PILE SUPPORTED DOCK**

Scale: 1" = 30'

PROGRESS SET NOT FOR CONSTRUCTION

R&M CONSULTANTS, INC.
9101 Vanguard Drive
Anchorage, Alaska 99507
rmconsult.com• email@rmconsult.com
phone: 907.522.1707 • fax: 907.522.3403

Haines Borough

LUTAK DOCK STUDY

No.	Description	Date

Drawn By: PMH
Checked By: JD/DA
Date: DEC 15, 2016
Phase: PRELIMINARY
Project No: 2443.01
SHEET TITLE: ALTERNATIVE 2 ABUTMENT SECTION
SHEET NO: 18 OF 25
C2.2

Z:\project\2443.01 Hb Haines Lutak Dock Study\Civil\ACAD\2443.01 - C2.1 Alternative 2 Pile Dock Plan & Elevation.dwg
Plotted 12/13/2016 4:44 PM by Mike Adams

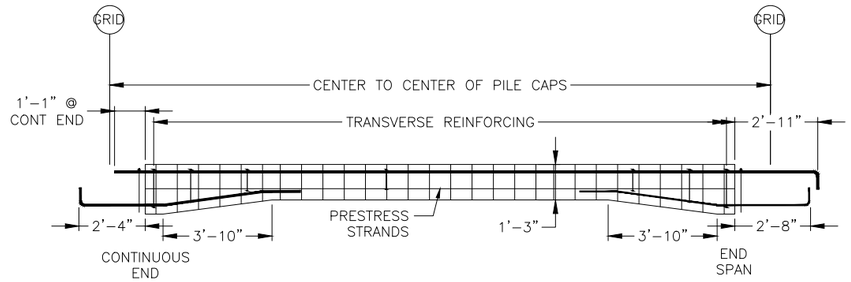

LONGITUDINAL SECTION - DECK PANEL

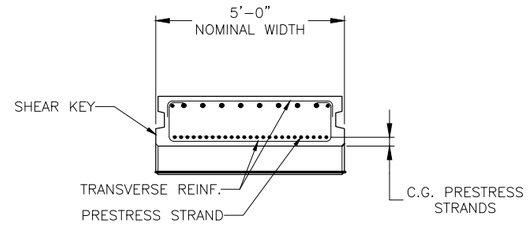

TRANSVERSE SECTION

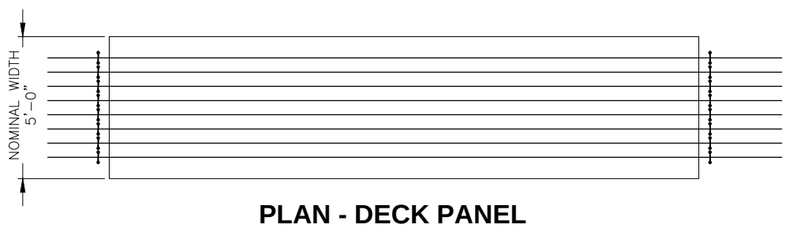

PLAN - DECK PANEL

1 HAUNCHED DECK PANEL DIMENSIONS & REINFORCING

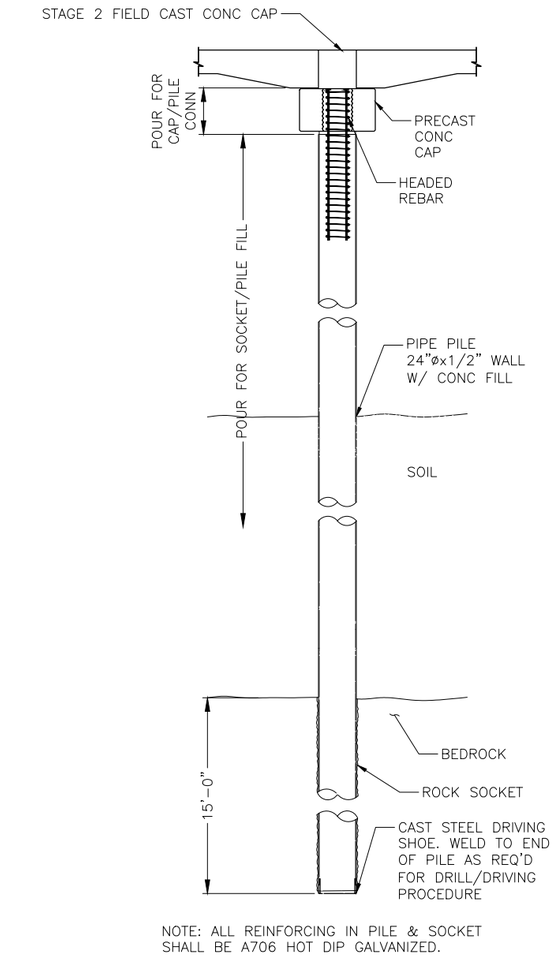

NOTE: ALL REINFORCING IN PILE & SOCKET SHALL BE A706 HOT DIP GALVANIZED.

2 TYPICAL PILE DETAIL

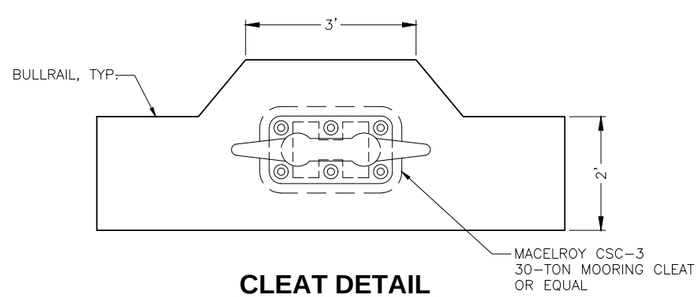

CLEAT DETAIL

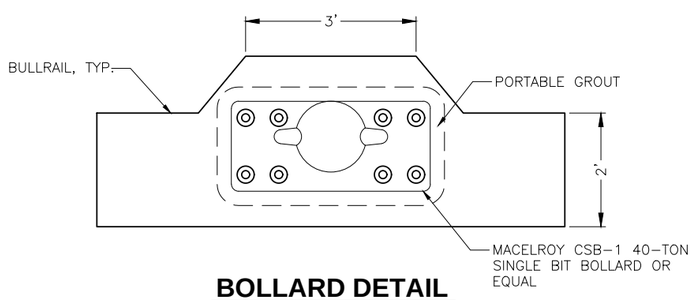

BOLLARD DETAIL

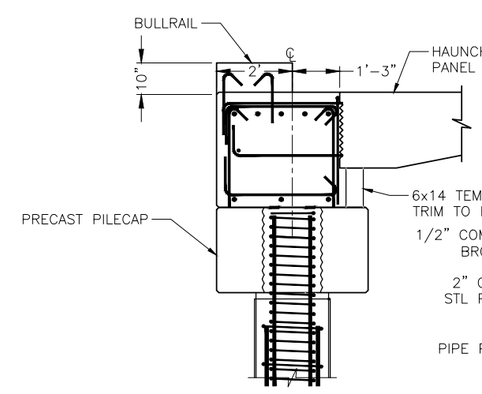

3 END PILE CAP SECTION

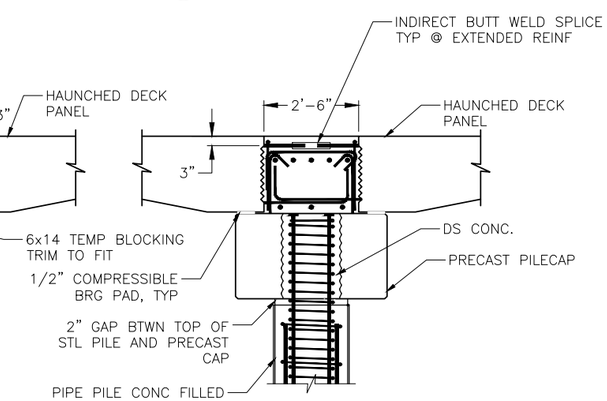

4 PILE CAP SECTION

PROGRESS SET NOT FOR CONSTRUCTION

R&M CONSULTANTS, INC.
9101 Vanguard Drive
Anchorage, Alaska 99507
rmconsult.com• email@rmconsult.com
phone: 907.522.1707 • fax: 907.522.3403

Haines Borough
LUTAK DOCK STUDY

No.	Description	Date

Drawn By: PMH
Checked By: JD/DA
Date: DEC 15, 2016
Phase: PRELIMINARY
Project No: 2443.01
SHEET TITLE: ALTERNATIVE 2 HAUNCHED DECK PANEL AND PILE CAP DETAILS
SHEET NO: 19 OF 25
C2.3

Z:\project\2443.01 Hb Haines Lutak Dock Study\Civil\ACAD\2443.01 – C2.3 Haunched Panel Decks & Pile Caps.dwg
Plotted 12/13/2016 4:45 PM by Mike Adams

ALTERNATIVE 3 - DOLPHIN FACE

COST ESTIMATE:

NO.	PAY ITEM DESCRIPTION	UNIT	QUANTITY	UNIT PRICE	AMOUNT
1	Mob and Demob	LS	1	$2,500,000	$2,500,000
2	Construction Survey	LS	1	$150,000	$150,000
3	Protected Species Observer	LS	1	$100,000	$100,000
4	Erosion and Pollution Control	LS	1	$25,000	$25,000
5	Silt Curtain - Boom	LS	1	$100,000	$100,000
6	Demolition of Pile Caps and Misc Structure	LF	770	$510	$392,700
7	Demolition of Sheet Pile Walls	SF	158,714	$3.50	$555,500
8	Demolition of Existing Fenders	EA	10	$2,000	$20,000
9	Demolition of Existing Fender Piles	EA	20	$2,500	$50,000
10	Excavation and Disposal of Existing Fill	CY	137,259	$15	$2,060,000
11	Dredging and Disposal	CY	32,369	$24	$776,900
	Sub Total Demolition				**$3,855,100**
12	Furnish and Install Select Material Type A	CY	13,423	$20	$268,500
13	Furnish and Install Subbase Grading Type B	CY	880	$25	$22,000
14	Furnish and Install Leveling Course D-1	CY	178	$40	$7,200
15	Furnish and Install Class I Rip Rap Slope Protection	CY	8,864	$102	$904,900
16	Furnish and Install Class IV Rip Rap Slope Protection	CY	11,223	$109	$1,227,900
17	Furnish 30" Pipe Piles	LF	3,300	$258	$851,400
18	Install 30 inch Diameter Piling in Rock Socket	EA	48	$25,000	$1,200,000
19	Furnish and Install Tension Anchor	EA	48	$35,000	$1,680,000
20	Furnish and Install 4 Pile Dolphins	EA	8	$210,000	$1,680,000

NO.	PAY ITEM DESCRIPTION	UNIT	QUANTITY	UNIT PRICE	AMOUNT
21	Furnish and Install Catwalks	LF	2	$1,250	$2,500
22	Furnish and Install Abutment Pile Cap	LS	1	$30,000	$30,000
23	Furnish and Barge Transfer Bridge	LS	1	$1,120,000	$1,120,000
24	Furnish and Install Life Rings	EA	4	$1,200	$4,800
25	Furnish and Install Fire Extinguishers	EA	4	$1,200	$4,800
26	Furnish and Install Fire Standpipe	LF	1,000	$120	$120,000
27	Furnish and Install 150# Anodes	EA	96	$1,200	$115,200
28	Electrical Mechanical and Lighting	LS	1	$315,600	$315,600
	Sub Total Construction				**$16,284,900**
A	Design Upland Survey	LS	1	$55,000	$55,000
B	Design Hydrographic Survey	LS	1	$20,000	$20,000
C	Design Geotech Program	LS	1	$140,000	$140,000
D	Design (10% of construction)	LS	1	$1,628,490	$1,628,490
E	Permitting Clean Water Act Section 10 and 404	LS	1	$20,000	$20,000
F	Permitting NMFS IHA	LS	1	$80,000	$80,000
G	Permitting NEPA	LS	1	$100,000	$100,000
H	Construction Administration (6% of construction)	LS	1	$977,094	$977,094
	Sub Total Engineering and Admin				**$3,020,584**

NO.	PAY ITEM DESCRIPTION	UNIT	QUANTITY	UNIT PRICE	AMOUNT
				Total Construction & Engineering Cost:	$19,305,484
				25% Contingency:	$4,826,371
				Total:	$24,100,000

PROGRESS SET NOT FOR CONSTRUCTION

R&M CONSULTANTS, INC.
9101 Vanguard Drive
Anchorage, Alaska 99507
rmconsult.com• email@rmconsult.com
phone: 907.522.1707 • fax: 907.522.3403

Haines Borough
LUTAK DOCK STUDY

No.	Description	Date

Drawn By: PMH
Checked By: JD/DA
Date: DEC 15, 2016
Phase: PRELIMINARY
Project No: 2443.01
SHEET TITLE: ALTERNATIVE 3 DOLPHIN FACE
SHEET NO: 20 OF 25
C3.0

Plotted 12/13/2016 4:45 PM by Mike Adams Z:\project\2443.01 Hb Haines Lutak Dock Study\Civil\ACAD\2443.01 – C3.0 Alternative 3 Description.dwg

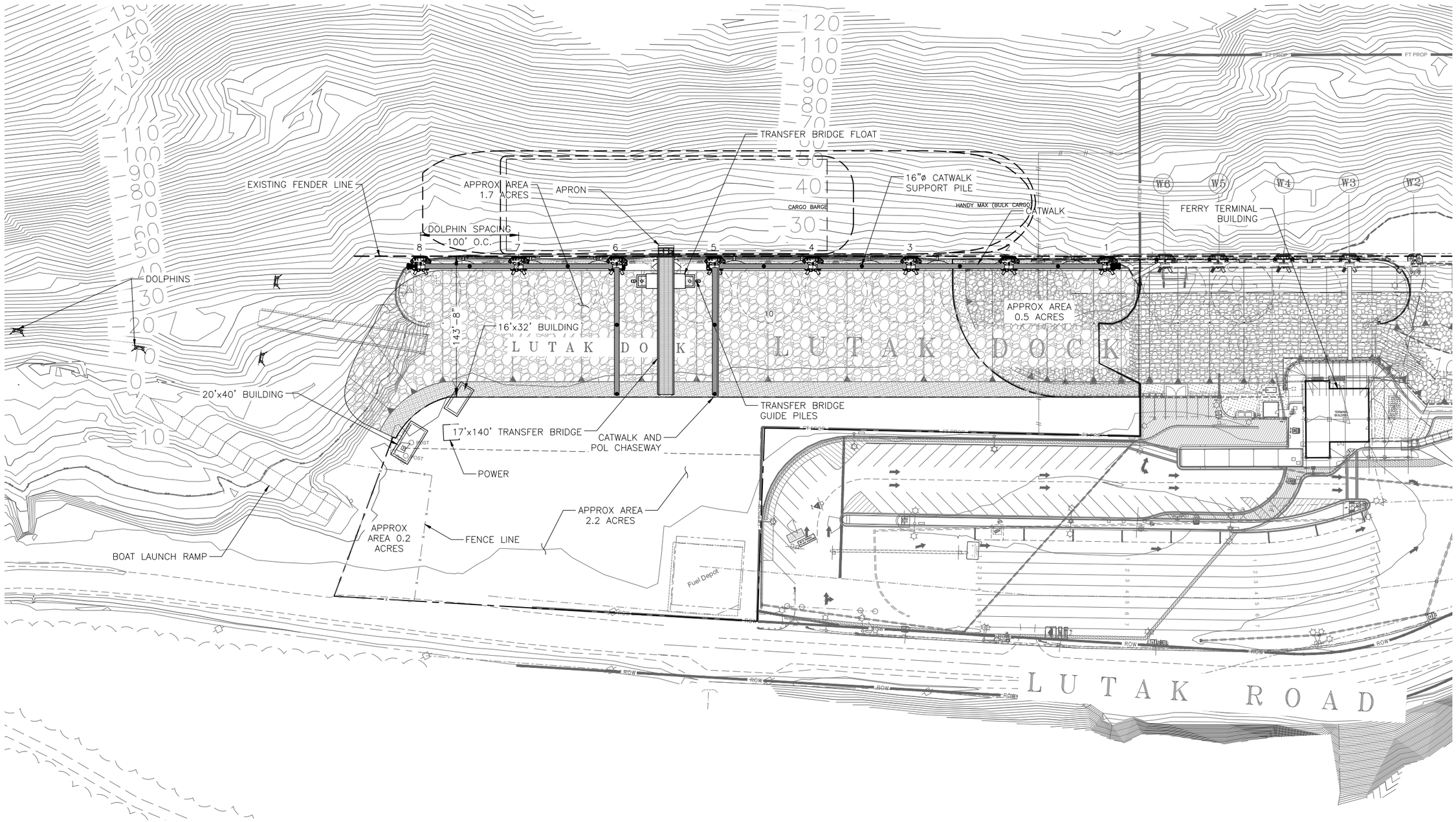

1 **SITE PLAN**
Scale: 1:100

0 50' 100'

PROGRESS SET
NOT FOR
CONSTRUCTION

R&M CONSULTANTS, INC.
9101 Vanguard Drive
Anchorage, Alaska 99507
rmconsult.com• email@rmconsult.com
phone: 907.522.1707 • fax: 907.522.3403

Haines Borough
LUTAK DOCK STUDY

No.	Description	Date

Drawn By: PMH
Checked By: JD/DA
Date: DEC 15, 2016
Phase: PRELIMINARY
Project No: 2443.01
SHEET TITLE: ALTERNATIVE 3 PLAN

SHEET NO:
21 OF 25
C3.1

Plotted 12/13/2016 4:46 PM by Mike Adams
Z:\project\2443.01 Hb Haines Lutak Dock Study\Civil\ACAD\2443.01 – C3.1 Alternative 3 Plan.dwg

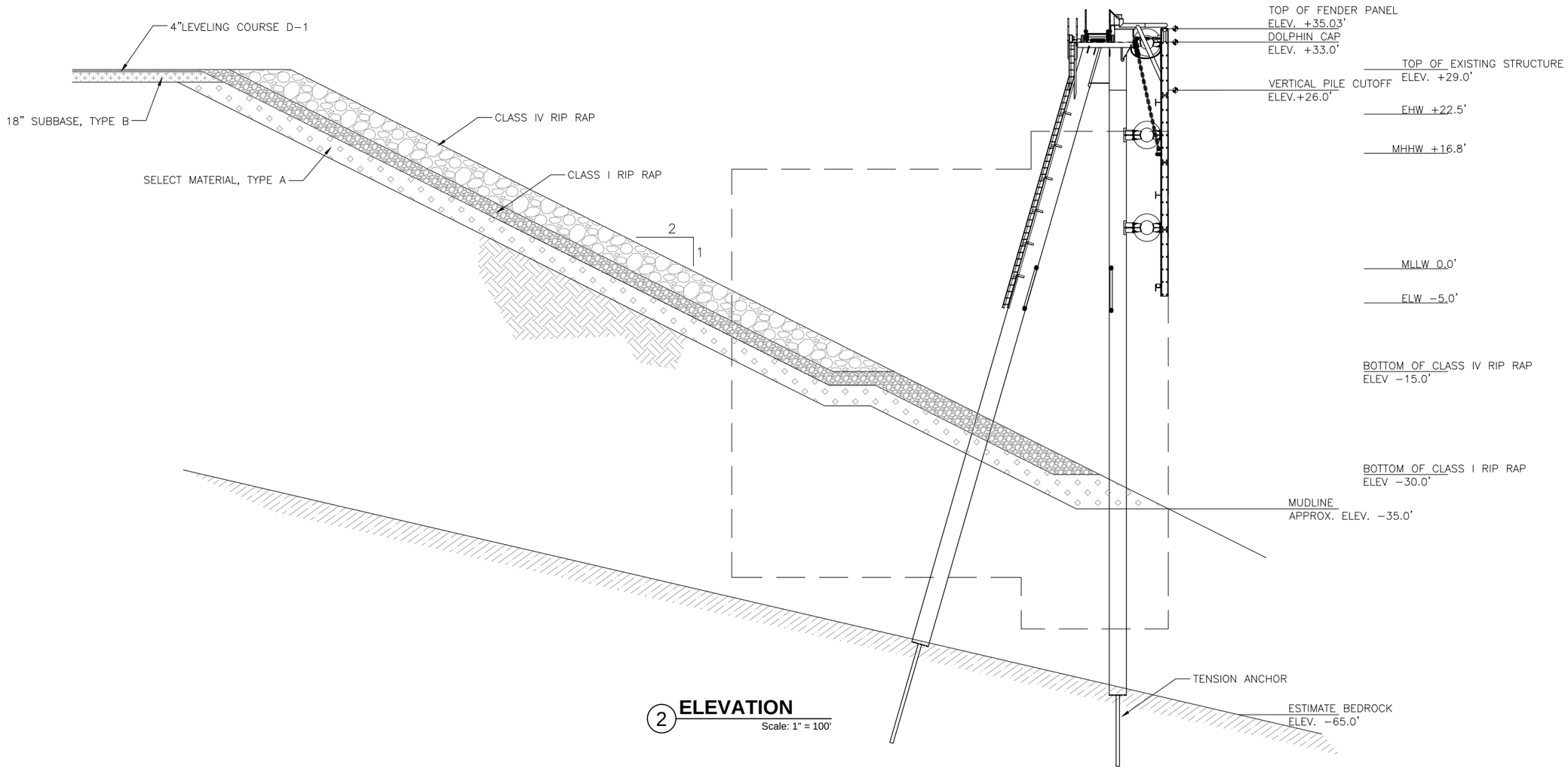

2 **ELEVATION**
Scale: 1" = 100'

PROGRESS SET
NOT FOR
CONSTRUCTION

R&M CONSULTANTS, INC.
9101 Vanguard Drive
Anchorage, Alaska 99507
rmconsult.com• email@rmconsult.com
phone: 907.522.1707 • fax: 907.522.3403

Haines Borough
LUTAK DOCK STUDY

No.	Description	Date

Drawn By: PMH
Checked By: JD/DA
Date: DEC 15, 2016
Phase: PRELIMINARY
Project No: 2443.01
SHEET TITLE: ALTERNATIVE 3 ELEVATION
SHEET NO: 22 OF 25
C3.2

Z:\project\2443.01 Hb Haines Lutak Dock Study\Civil\ACAD\2443.01 - C3.2 Alternate 3 Elevation.dwg
Plotted 12/13/2016 4:47 PM by Mike Adams

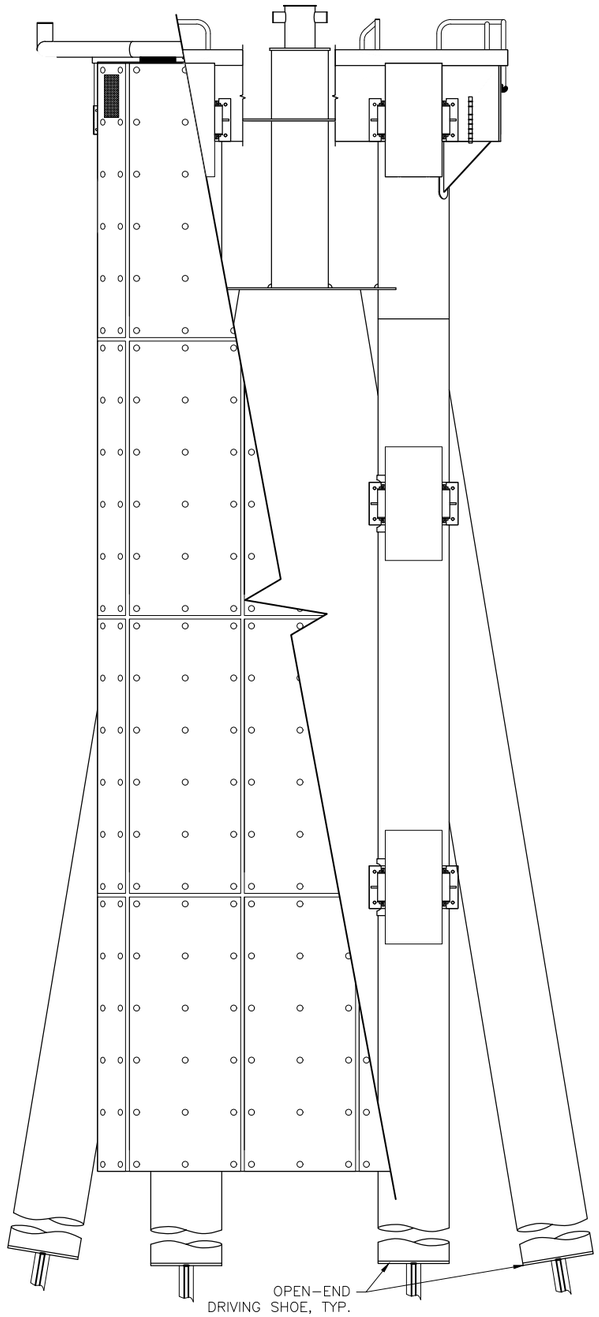

1 **FRONT ELEVATION**
Scale: 3/8" = 1'-0"

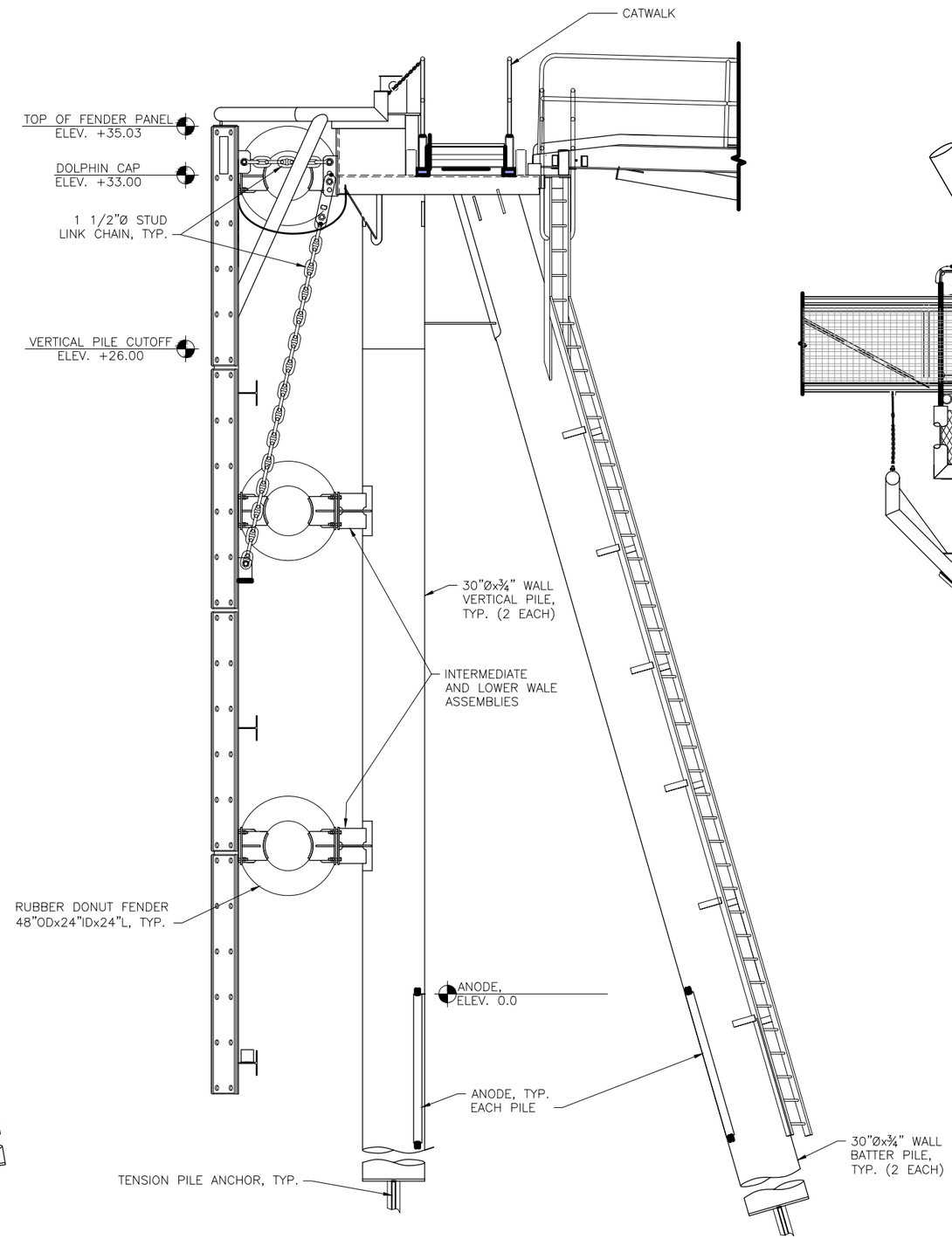

2 **SIDE ELEVATION**
Scale: 3/8" = 1'-0"

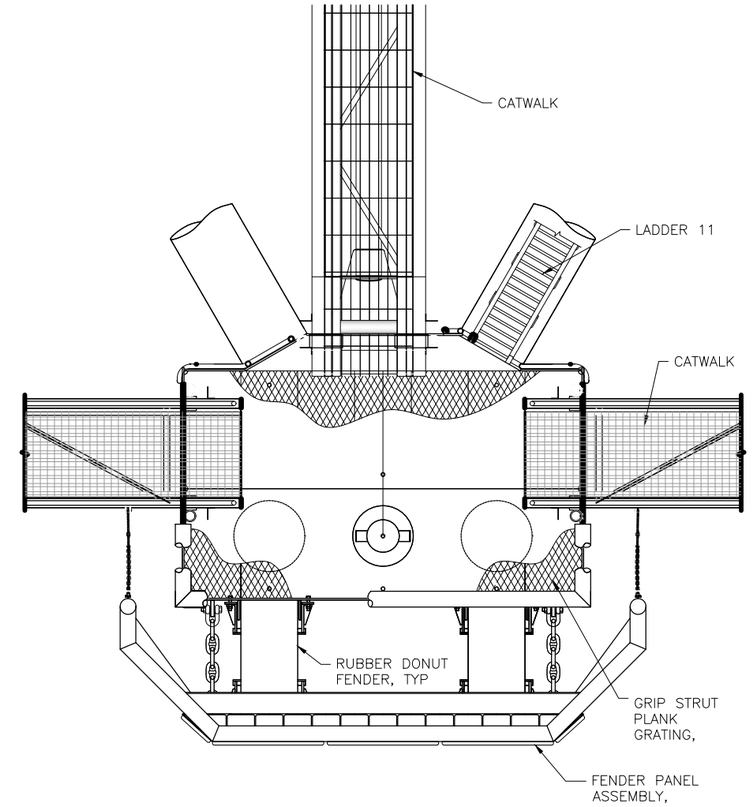

3 **TOP PLAN VIEW**
Scale: 3/8" = 1'-0"

PROGRESS SET
NOT FOR
CONSTRUCTION

R&M CONSULTANTS, INC.
9101 Vanguard Drive
Anchorage, Alaska 99507
rmconsult.com• email@rmconsult.com
phone: 907.522.1707 • fax: 907.522.3403

Haines Borough
LUTAK DOCK STUDY

No.	Description	Date

Drawn By: PMH
Checked By: JD/DA
Date: DEC 15, 2016
Phase: PRELIMINARY
Project No: 2443.01
SHEET TITLE:
ALTERNATIVE 3
4 PILE DOLPHIN
DETAILS

SHEET NO:
23 OF 25
C3.3

Z:\project\2443.01 Hb Haines Lutak Dock Study\Civil\ACAD\2443.01 – C3.3 – 4 Pile Dolphin Details.dwg
Plotted 12/13/2016 4:47 PM by Mike Adams

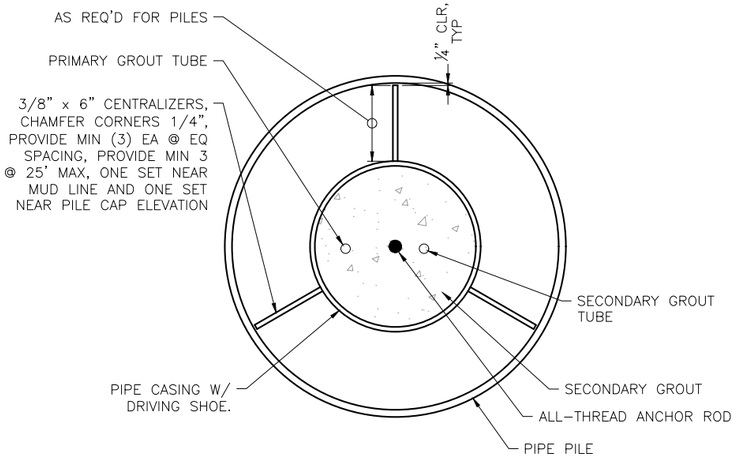

1 FREE STRESS ANCHOR SECTION

Scale: 1-1/2" = 1'-0"

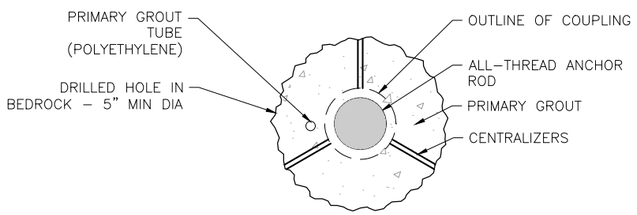

2 BONDED ROCK ANCHOR SECTION

Scale: 1-1/2" = 1'-0"

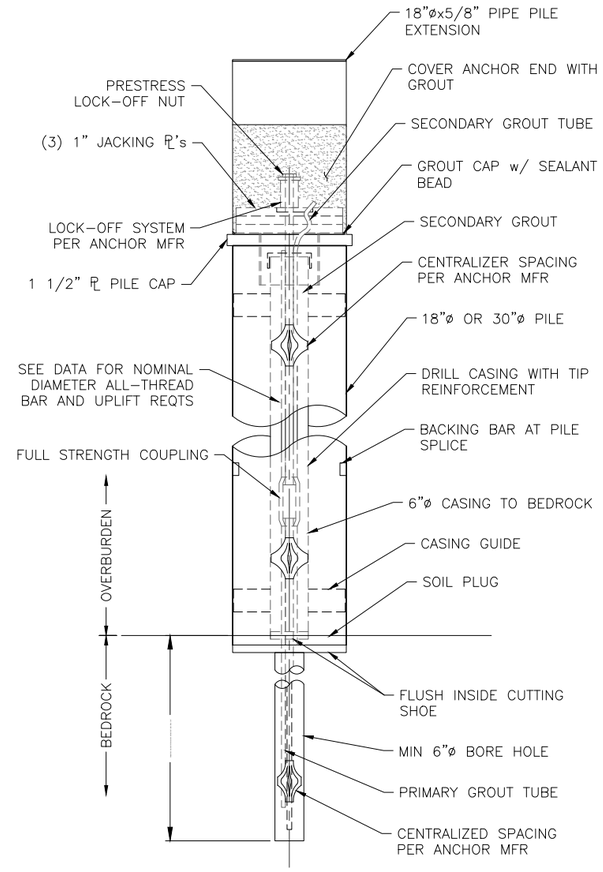

4 TENSION PILE ANCHOR SECTION

Scale: NTS

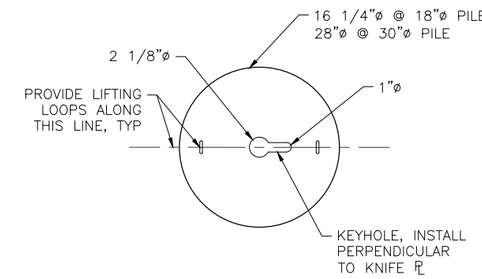

5 TOP JACKING PLATE

Scale: NTS

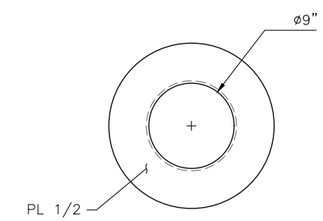

PLAN

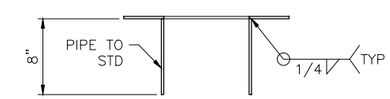

GROUTING CAP

6 GROUTING CAP

Scale: NTS

ROCK ANCHOR NOTES

GENERAL

1. ROCK ANCHOR DESIGN AND DETAILS ARE BASED ON "RECOMMENDATIONS FOR PRESTRESSED ROCK AND SOILS ANCHORS PTI DC35.1–14" BY THE POST TENSIONING INSTITUTE. MEANS, METHODS, AND MATERIALS MAY BE MODIFIED AT THE REQUEST OF THE CONTRACTOR AS LONG AS THEY CONFORM TO THESE STANDARDS AND ARE APPROVED BY THE ENGINEER PRIOR TO CONSTRUCTION.
2. THE CONTRACTOR SHALL SUBMIT FOR APPROVAL A ROCK ANCHOR INSTALLATION PLAN THAT INCLUDES ALL MATERIALS, EQUIPMENT, AND METHODS TO BE USD IN THE FURNISHING AND INSTALLATION OF ROCK ANCHORS.

MATERIALS & SPECIFICATIONS

1. ANCHOR RODS SHALL BE SOLID THREAD BAR WITH 150 KSI YIELD STRENGTH. COUPLINGS SHALL BE CAPABLE OF DEVELOPING THE FULL TENSILE STRENGTH OF THE BAR.
2. ANCHOR RODS SHALL BE EQUIPPED WITH POLYETHYLENE CENTRALIZERS TO ENSURE THAT THE ANCHOR ROD IS CENTERED IN THE CASING AND DRILLED HOLE.
3. ALL STEEL BEARING, JACKING, AND WEDGE PLATES SHALL BE ASTM A572, GRADE 50.
4. PROVIDE PTI CLASS 2 CORROSION PROTECTION WITH GROUT PROTECTED TENDON.
5. THE CONTRACTOR SHALL DESIGN THE INTERIOR CASING AND CASING CENTRALIZERS.
6. PRIMARY AND SECONDARY GROUT MIXTURES SHALL BE DESIGNED BY THE CONTRACTOR IN ACCORDANCE WITH RECOMMENDATIONS PROVIDED BY THE ANCHOR ROD SYSTEM MANUFACTURER. GROUT MIXTURE MATERIALS INCLUDING AGGREGATES SHALL BE IMPORTED MATERIALS. USE OF LOCALLY OBTAINED AGGREGATES WILL NOT BE PERMITTED. SUBMIT GROUT MIXTURE DESIGNS TO THE ENGINEER FOR APPROVAL PRIOR TO CONSTRUCTION.
7. THE GROUT TO BEDROCK BOND SHALL BE DESIGNED TO DEVELOP THE FULL CAPACITY OF THE ANCHOR ROD.
8. THE MAXIMUM ULTIMATE GROUT TO BEDROCK STRENGTH SHALL BE 210 PSI.
9. THE MINIMUM ROCK ANCHOR BEDROCK HOLE DIAMETER SHALL BE 5 INCHES.
10. THE MINIMUM ROCK ANCHOR BORE HOLE LENGTH SHALL BE 20 FEET.

TESTING

1. THE CONTRACTOR SHALL SUBMIT FOR APPROVAL A TESTING PROGRAM THAT FOLLOWS THE GUIDELINES OF PTI DC35.1–14. THIS SHALL INCLUDE A PROOF TEST.
2. ROCK ANCHORS SHALL BE TESTED IN THE PRESENCE OF THE ENGINEER OR OWNERS ON SITE REPRESENTATIVE.

PROGRESS SET NOT FOR CONSTRUCTION

R&M CONSULTANTS, INC.
9101 Vanguard Drive
Anchorage, Alaska 99507
rmconsult.com• email@rmconsult.com
phone: 907.522.1707 • fax: 907.522.3403

Haines Borough
LUTAK DOCK STUDY

No.	Description	Date

Drawn By: PMH
Checked By: JD/DA
Date: DEC 15, 2016
Phase: PRELIMINARY
Project No: 2443.01
SHEET TITLE: ALTERNATIVE 3 TENSION ANCHOR DETAILS
SHEET NO: 24 OF 25
C3.4

Z:\project\2443.01 Hb Haines Lutak Dock Study\Civil\ACAD\2443.01 – C3.4 – Rock Anchor Details.dwg
Plotted 12/13/2016 4:48 PM by Mike Adams

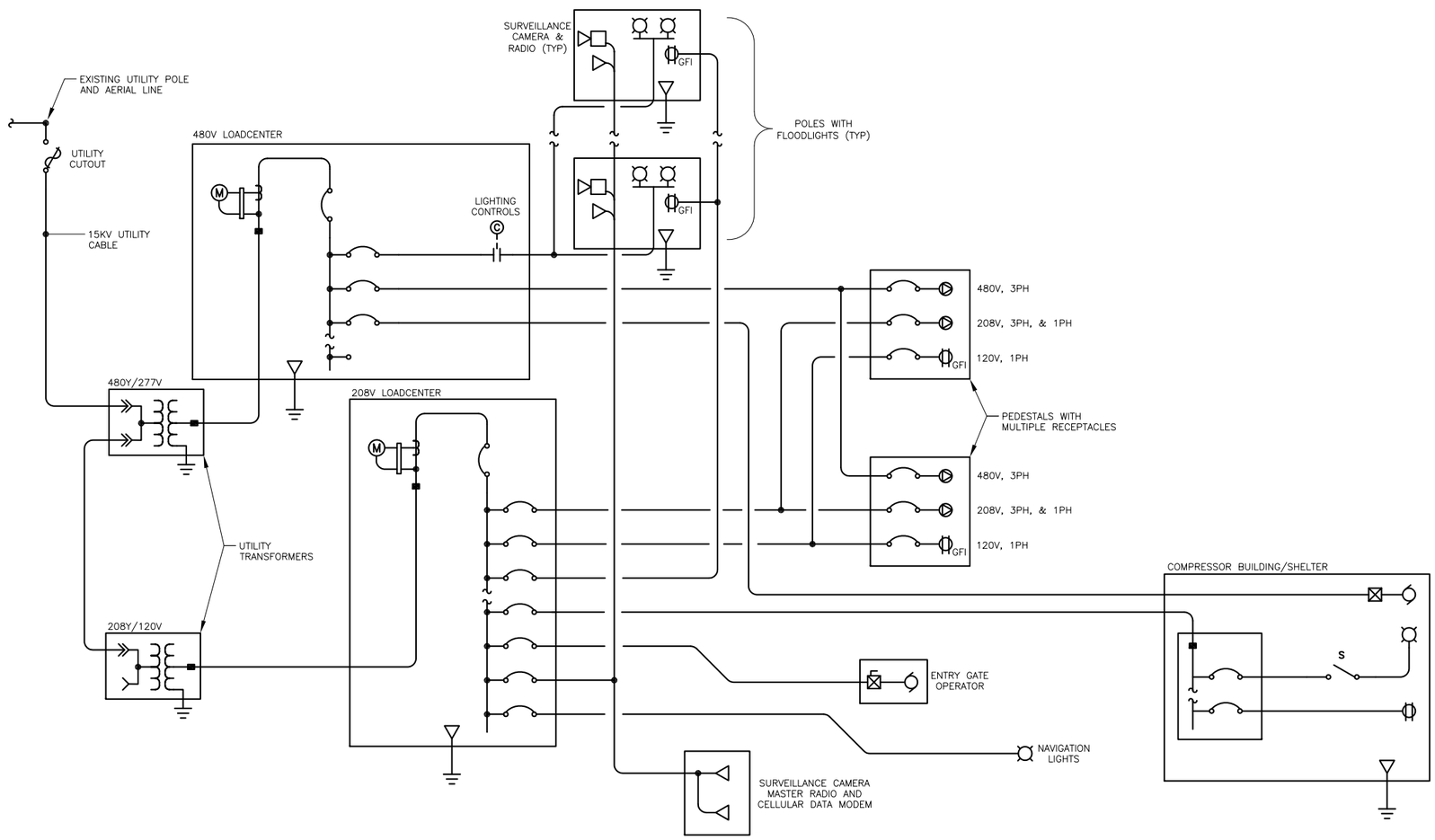

1 SINGLE LINE DIAGRAM – POWER DISTRIBUTION SYSTEM

NO SCALE

PROGRESS SET NOT FOR CONSTRUCTION

R&M CONSULTANTS, INC.
3701 Vanguard Drive
Anchorage, Alaska 99507
rmconsult.com • email@rmconsult.com
phone: 907.522.1707 • fax: 907.522.3403

HAIGHT & ASSOCIATES
CONSULTING ELECTRICAL ENGINEERS
520 Main Street, Juneau, Alaska 99801
(907) 586-2788

Haines Borough

LUTAK DOCK STUDY

No.	Description	Date

Drawn By: REJ
Checked By: BCH
Date: DEC 1, 2016
Phase: DRAFT CONCEPT
Project No: 2443.01
SHEET TITLE: SINGLE LINE DIAGRAM
SHEET NO: OF 22
E100

Plotted 12/6/2016 8:42 AM by Robbie Jensen F:\Projects\278 R&M Consultants Inc\11 – Haines Lutak Dock 2016\Drawings\Working\E100.dwg